LEGO
STAR WARS
Booklet available in English on
Heft in deutscher Sprache erhältlich auf
Livret disponible en français sur
Libretto disponibile in Italiano su
Folleto disponible en español en
Folheto disponível em português em
A füzet magyarul ezen a honlapon olvasható:
Buklets latviešu valodā pieejams vietnē
如需中文版手册，请访问
LEGO.com/starwars
75244 | Tantive IV™
Disney
LEGO LIFE

Design Director
Jens Kronvold Frederiksen

Model Designer
César Carvalhosa Soares

Graphic Designer
Madison O'Neil

ABOUT THE LEGO® *STAR WARS*™ DESIGN TEAM

LEGO® *Star Wars* began in 1999 with a team of the galaxy's greatest design heroes. Today we are ten model designers and three graphic designers based in Billund, Denmark. Each of us was selected for our many years of LEGO model design experience, but also because we are all such big *Star Wars* fans.

Over the years many of us have collaborated on a great many LEGO *Star Wars* projects, so it's always a lot of fun for us to work together. But our younger designers bring an essential fresh take on a constantly evolving *Star Wars* universe.

We want our LEGO *Star Wars* models to feel really exciting to own. We have to ask ourselves, how can we stimulate creativity with the building experience, and excite the imagination through playability? So these bigger models require a special attention to detail and accuracy, making them fun and exciting to develop, but also a huge challenge.

With this model we really worked to get the full potential out of every brick. It's great to look at, super accurate and packed with play features. Perfect for rebuilding some famous scenes from the movie or finding the ideal display spot to show off to friends! We hope that you have as much fun building it as we did designing it.

Happy building!

Jens Kronvold Frederiksen
Design Director, LEGO® *Star Wars*™

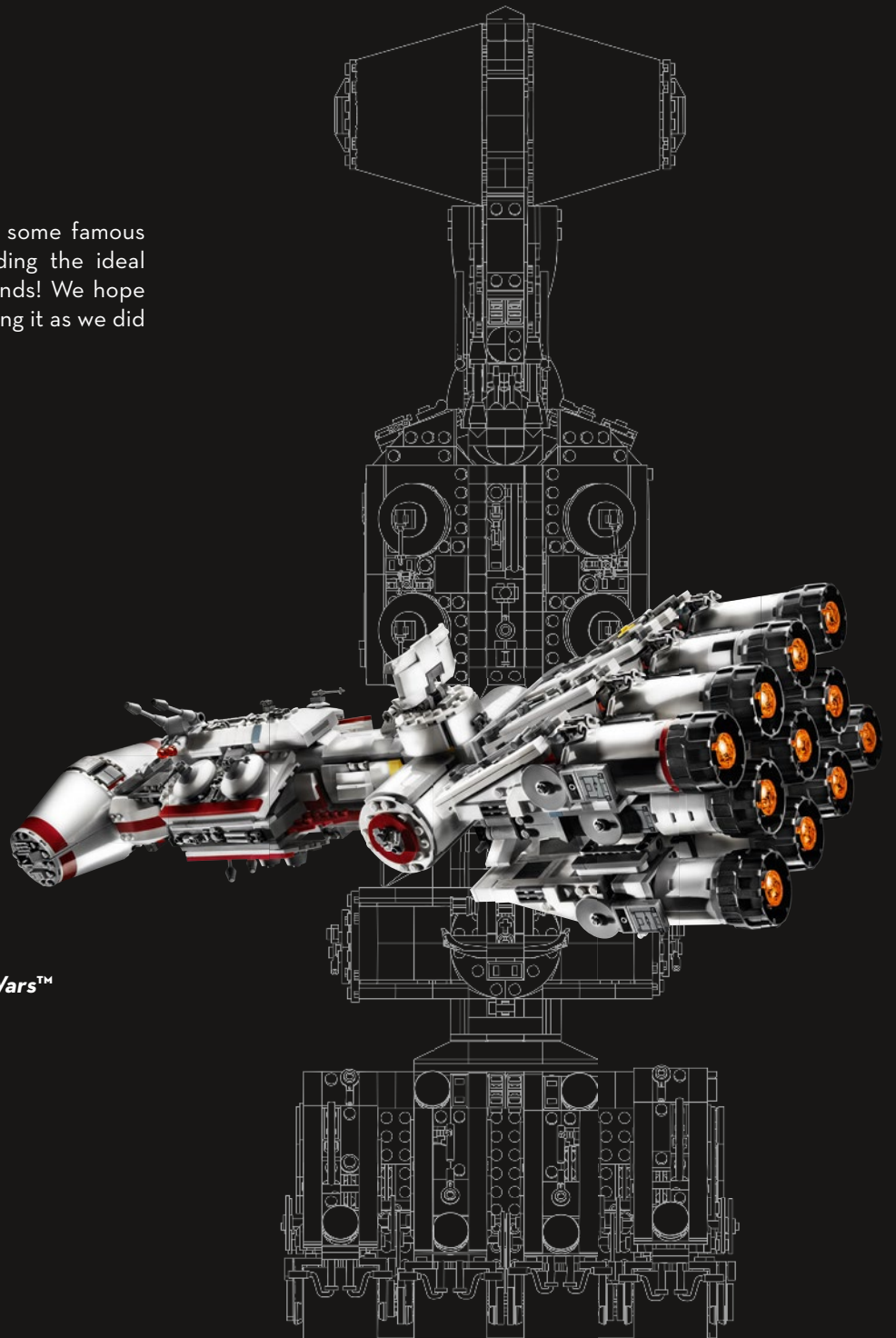

ABOUT THE *TANTIVE IV*™

The *Tantive IV*™, a CR90 corvette, was designed by the Corellian Engineering Corporation to safely commute entire diplomatic escorts across the galaxy. The standard CR90 had the capacity to reach up to 950 kph and was armed with six turbolaser turrets. Recognised as an ambassadorial craft, the CR90 proved to be the perfect vessel to help the Rebellion evade the eyes of the Empire. The most famous of all these craft was the war-ready Alderaan™ cruiser *Tantive IV*.

The *Tantive IV* was the personal transport of one of the founders of the Rebellion, Senator of Alderaan Bail Organa. The *Tantive IV* was docked on the Rebel flagship *Profundity* when the breakaway Rebel group Rogue One successfully stole the Death Star™ plans and called the fleet into battle. After a crippling fight, the *Tantive IV's* hyperdrive, engines and weapons were badly damaged. Despite the damage, it was able to escape with the Death Star plans aboard.

Pursued across the galaxy by Darth Vader™ in the Imperial Star Destroyer, *Devastator*, it was testament to the firepower and speed of the *Tantive IV* that it almost reached its destination, before being overrun. But the Death Star plans were already beyond the Empire's reach, hurtling towards the planet Tatooine's surface in the hands of droids C-3PO™ and R2-D2™.

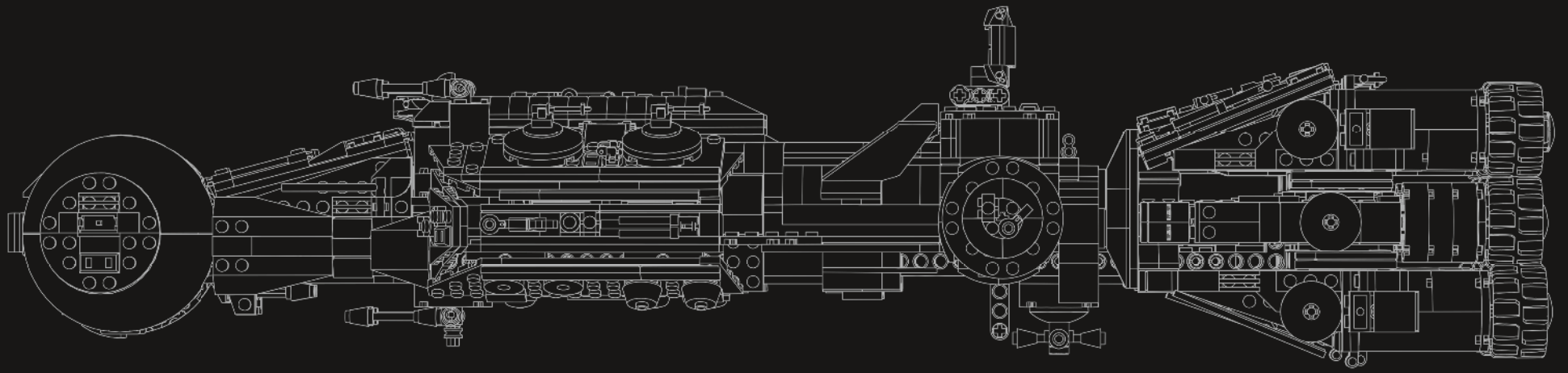

FACTS/SPECIFICATIONS

TANTIVE IV™

Manufacturer . . . . . Corellian Engineering Corporation
Model. . . . . CR90 corvette
Class. . . . . Corvette

TECHNICAL SPECIFICATIONS

Length . . . . . 126.68 meters
Maximum acceleration . . . . . 2,100 G
Maximum speed (atmosphere) . . . . . 950 kph
Engine unit(s) . . . . . Girodyne Ter58 ion turbine engines (11)
Hyperdrive rating . . . . . Class 2.0
Taim & Bak H9 turbolasers (6)
Armament. . . . . 2 dual turbolasers
4 single turbolasers

MEET THE MODEL DESIGNER

César Carvalhosa Soares

Q: ***The Tantive IV™ is the very first ship we see in the Star Wars universe. How did it feel to be tasked with designing this build? And did you feel any pressure?***
A: I was thrilled! Not only is it the first ship you see but it also happens to be one of my favourites from the *Star Wars* universe, with such a cool shape and the massive 11 engines at the back. In LEGO® *Star Wars* we get to work with a wide range of models, from low price points to the higher ones, so when I was tasked with the designing of this build I didn't feel any particular pressure. But of course, being a personal favourite of mine, it felt really special to be able to design it and recreate all the details and features that make this ship so iconic.

Q: ***The model used for the in-universe Tantive IV was different in Star Wars: A New Hope, Return of the Jedi and Revenge of the Sith. Does the brick format LEGO vehicle take more inspiration from one than the other?***
A: The external shape of the model, including measurements and proportions, along with all the features like cannons and mechanical details are all based on the version seen in *Star Wars: A New Hope*, the very first one we get to see. Unfortunately, the interior on this version doesn't get much screen time, so I used the interior shots we see in *Star Wars: Revenge of the Sith* as reference for some of the details.

Q: ***A LEGO brick version of the Tantive IV was released in 2001 under the title, Rebel Blockade Runner, and again in 2009 with a minifigure set.*** *How does this edition stand out as unique?*
A: The brief for this set was to make a model that would have a lot of playability, with play functions and interior rooms for kids to enjoy, but also it should be a model that looks good on a shelf. By using new elements such as the big cockpit pieces, and new features like the spring-loaded shooters and the handle that allows you to transport the model more easily – I think that we managed to achieve both goals.

Q: ***When you begin the design process, do you start with a number of bricks in mind? Or is the brick count informed by other factors?***
A: Usually we don't consider the number of pieces when we are designing a model. The goal is to be able to build something of a suitable size that matches the required price point, but also reflects the type and amount of play features suitable for that particular model. The number of pieces that come out of it is therefore usually incidental.

Q: ***The Tantive IV™ has a huge engine block. This must have been difficult to put into LEGO® form, especially when you consider the elongated nature of the ship. What techniques did you use to ensure the model would be robust enough to cope with such a big engine block?***

A: Very much yes. Ensuring that the engine block was robust enough was a big challenge. I created a very sturdy LEGO Technic frame that runs from the front of the ship to the end. Here the frame extends to the sides, creating a flat surface in the shape of a T. Then all 11 engines are individually connected to this frame using LEGO Technic pins.

Q: ***From a designer's point of view, are there any features that you are particularly proud of? And what challenges did they present?***

A: One of the features that I'm very proud of is the inclusion of the handle. Being such a long ship with an odd shape, it is not easy for someone to pick it up and transport it. So, the inclusion of a handle was decided very early in the process. Of course, this was a big challenge because the handle had to be mounted very securely. But also because it would have to be in a precise location on the model, in order to make it feel balanced when you pick it up. In the end, the perfect spot for it ended up being in the same place as the ship's radar dish, so I was able to integrate the handle with the dish.

Q: ***A true collector might keep this edition of the Tantive IV in 'new and unopened' condition. Be honest, if you weren't the designer would you be able to resist opening the box?***

A: No, I wouldn't, although I understand the collectibility appeal of some of the LEGO *Star Wars* models. For me, LEGO sets are ultimately toys. And toys are made to be played with. In this case I would say even more, as this is mainly a play set with lots of cool features and minifigures that will allow everybody to recreate iconic scenes from the movies.

MEET THE GRAPHIC DESIGNER

Madison O'Neil

Q: ***Designing LEGO® minifigures for a special edition is a great opportunity, but it's also a big challenge. Where do you start?***
A: For a graphic designer, the first step in the design process is usually gathering reference images. In this case it was very simple, in fact I will usually just watch the films and take screenshots. Many of the characters have also appeared in previous LEGO sets, specifically the *Tantive IV*™ that was released 10 years ago in 2009. I looked at how characters like Captain Antilles were made previously, and then gave them a style update.

Q: ***With so many minifigures included in the set, do you design them as a group or work on them one by one?***
A: Once we determine which characters we think are important to include in the model, I focus on one at a time. Certain graphic elements do carry over from character to character on occasion. For example, the Rebel Fleet Trooper and Captain Antilles wear the same style of helmet, so it was important that they have the same straps across their chins.

Q: ***From start to finish, how long did it take to complete the design process? And what was the most time consuming part?***
A: There are multiple stages in creating a fully realised design. Take for example the minifigure of Bail Organa. The first step in his creation was designing him digitally. He then went through a coaching process in which several other LEGO graphic designers would review him for style and production requirements. After that he was submitted to Lucasfilm for approval, along with all the other minifigures in the model.

Originally we had submitted the version of Bail from *Revenge of the Sith*, but in the end we decided together with Lucasfilm that it would make more sense in the story timeline if he were wearing his costume from *Rogue One*. So we had to repeat the process to create his current design. Once he was finally approved by Lucasfilm, we generated test samples of each new printed element in the minifigure, and he was complete! It's different for every model, but it can take months for characters to go from inception to final execution.

Q: ***Star Wars characters are highly developed, how do you convey a sense of their personality in something as small as a minifigure?***
A: I find that the facial expressions are the key to showing a minifigure's personality. On the front side of a minifigure's head we will usually design a character with a slightly neutral expression, a gentle smile or light frown depending on who it is. It's on the back of the head where we push the expression further to capture another aspect of the character's personality or story. For example, the horrified face of Captain Antilles as he's about to be strangled by Darth Vader™.

Q: ***When you are exploring reference images for the minifigures, do you ever discover something you didn't know about the characters?***
A: I am constantly finding small new details I had never noticed before in the films. In this model I discovered that Bail Organa's belt buckle is engraved with a unique symbol, and I also got a close look at the code cylinders he wears across his chest.

Q: ***Why do you think this edition is so special?***
A: This year marks the 20th anniversary of LEGO® *Star Wars*. The last time the *Tantive IV*™ was created as a LEGO model was 10 years ago. The characters in this model are meant to be a reflection of the characters included in 2009, with the addition of Bail Organa, who has never before been made into a minifigure. All the other characters have been updated and Princess Leia™ also appears with a skirt element!

Q: ***How would you describe the feeling of seeing your designs come to life?***
A: Before working for LEGO *Star Wars* I was an avid fan, so now being on the opposite end of the process is rather surreal. The most rewarding moments are when friends or family reach out to me to say they or their children are enjoying a model that I played a part in designing.

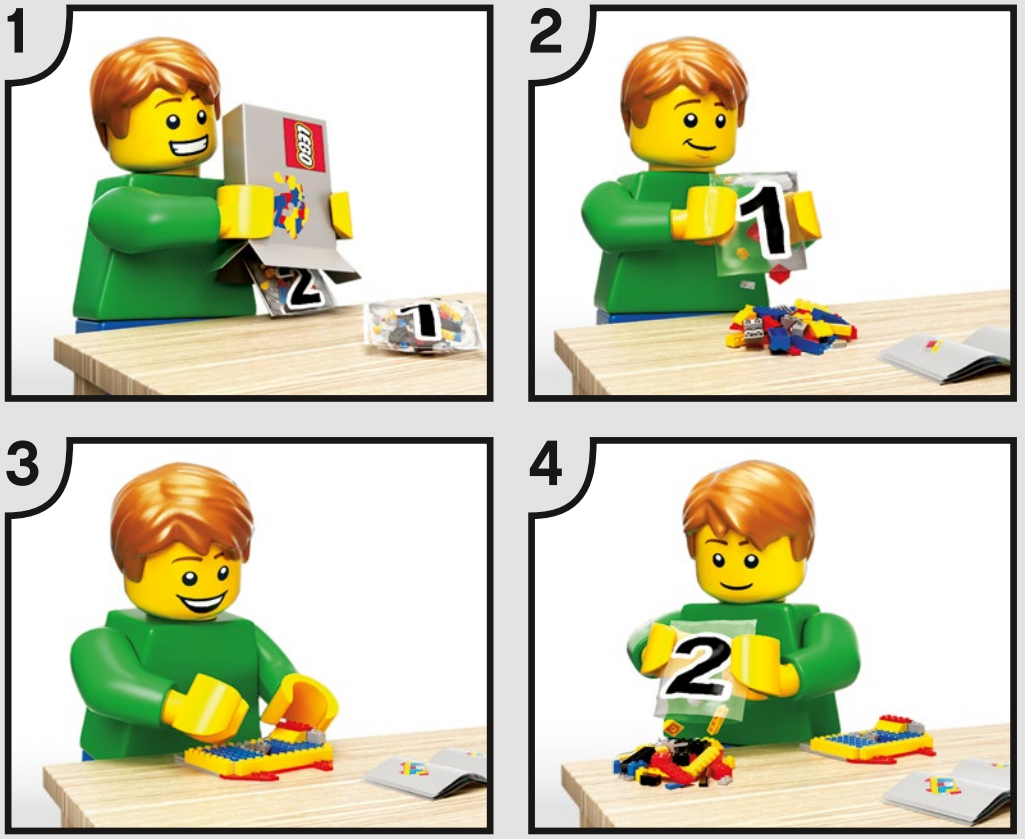

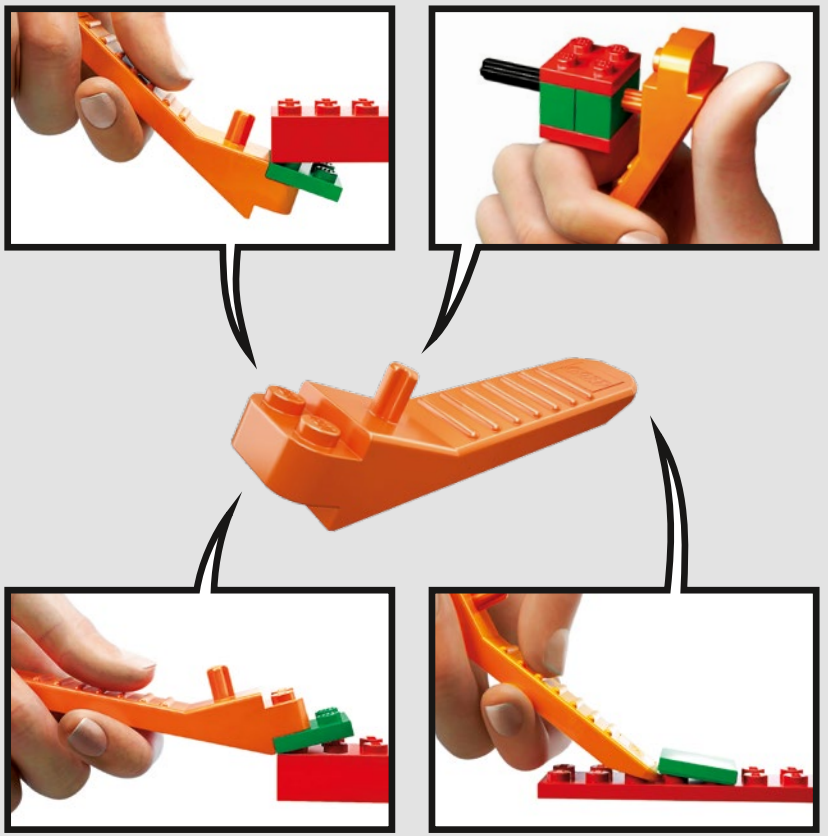

LEGO.com/brickseparator

1

2

3

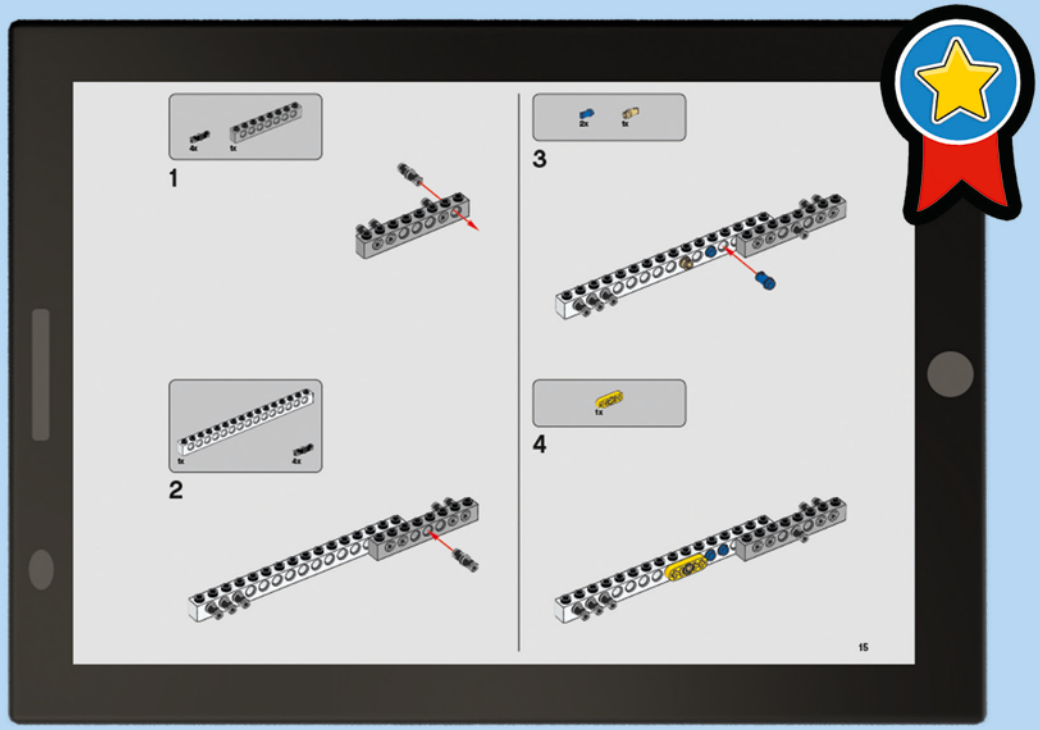

LEGO.com/apps

Check for compatibility
Kompatibilität prüfen
Vérifier la compatibilité
Controlla la compatibilità
Comprueba tu compatibilidad
Verificar a compatibilidade
Ellenőrizd a kompatibilitást
Pārbaudīt saderību
检查兼容性

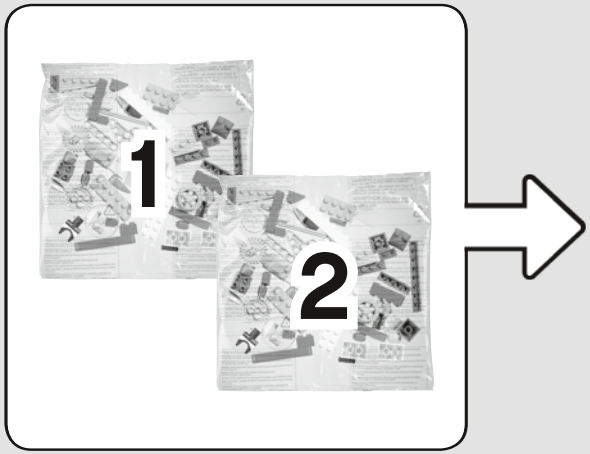
1
2

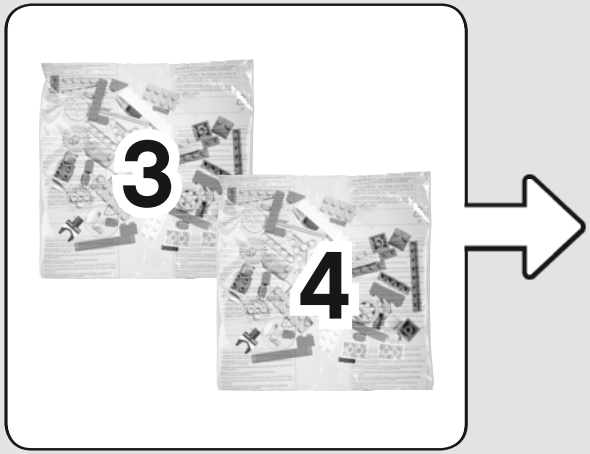
3
4

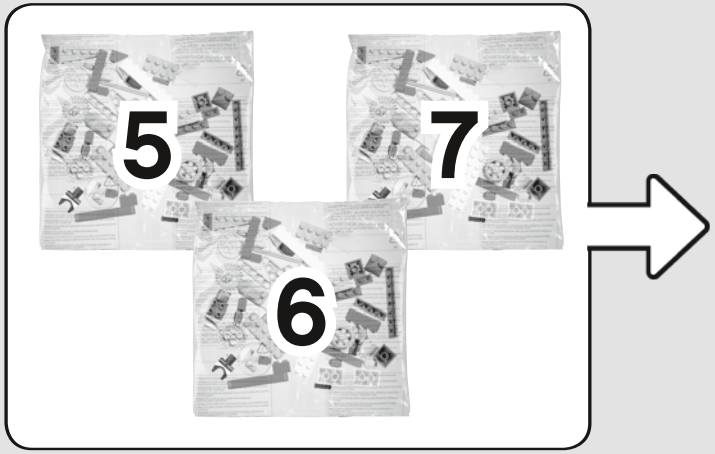
5
7
6

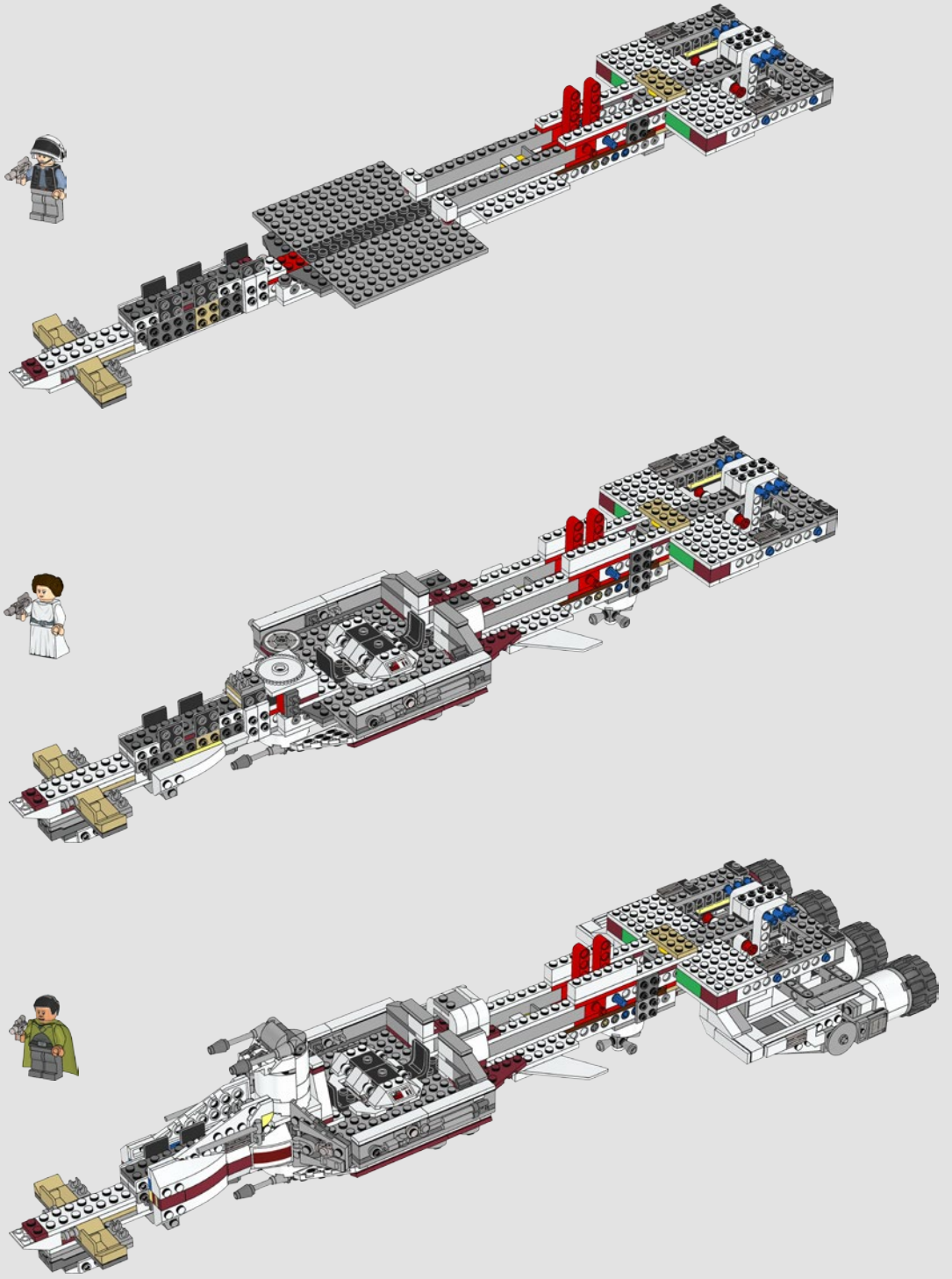

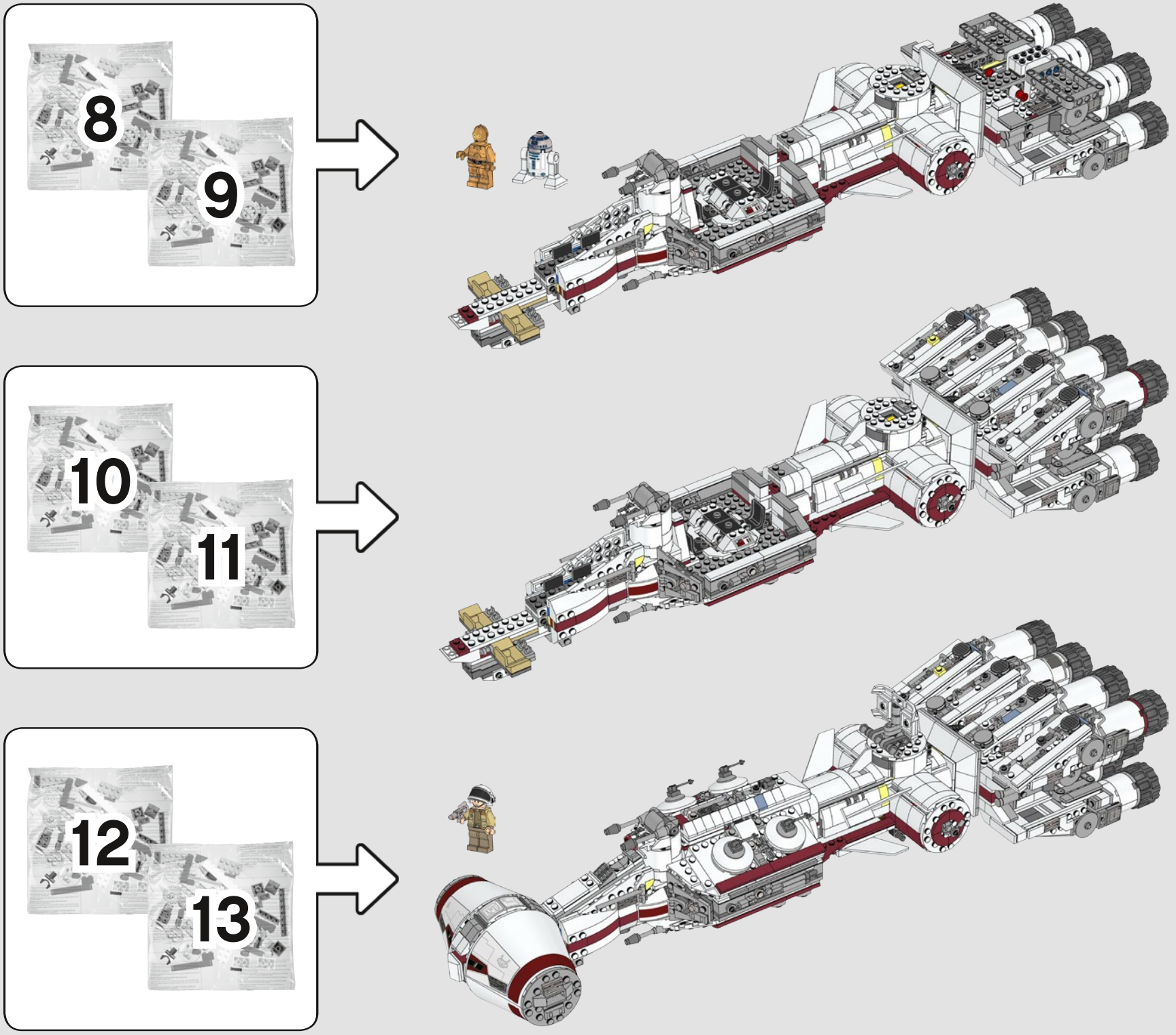
8
9
10
11
12
13

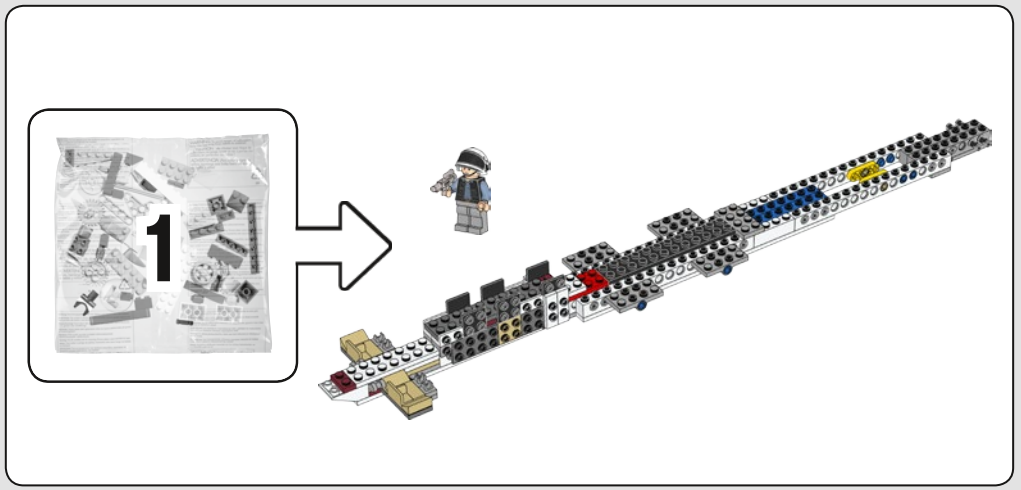
1

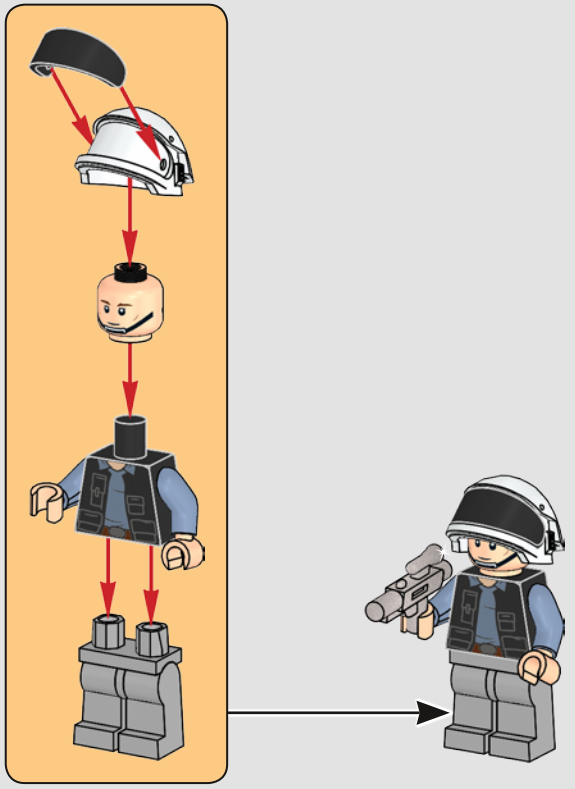

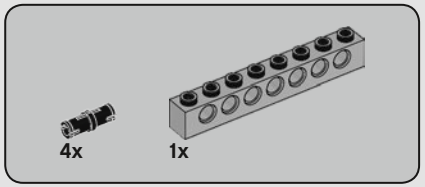

1

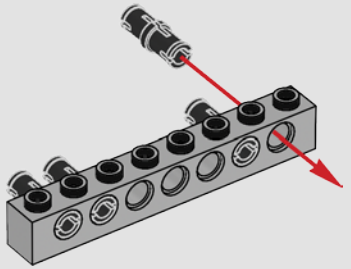

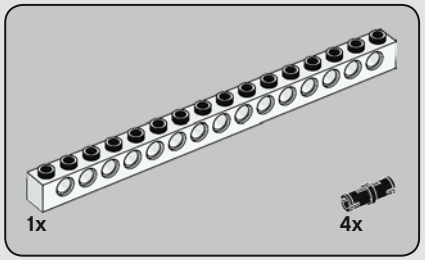

2

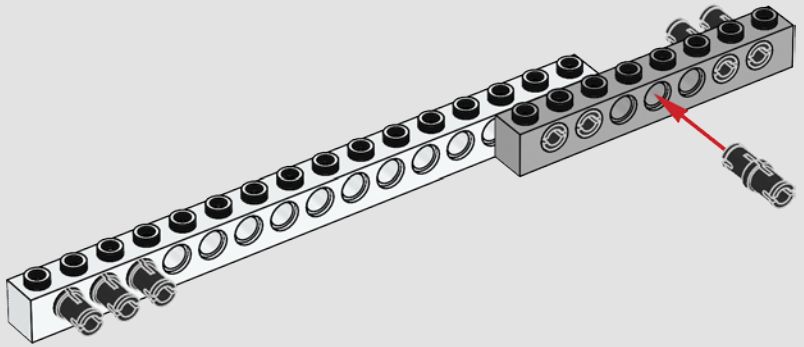

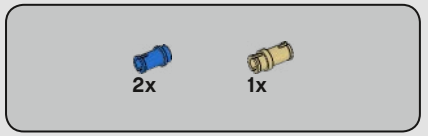

3

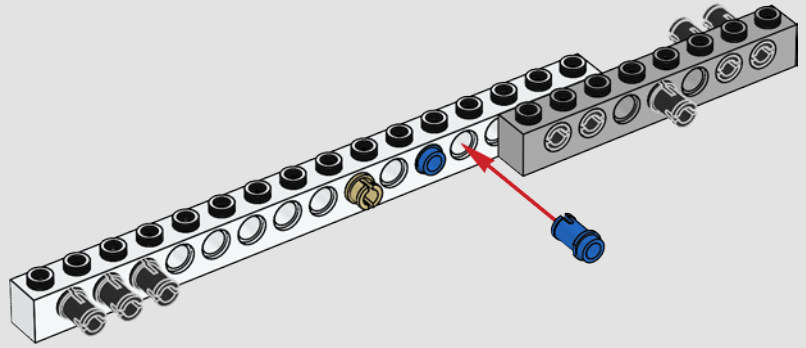

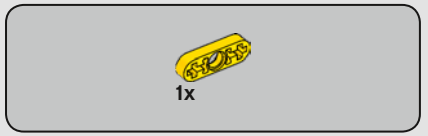

4

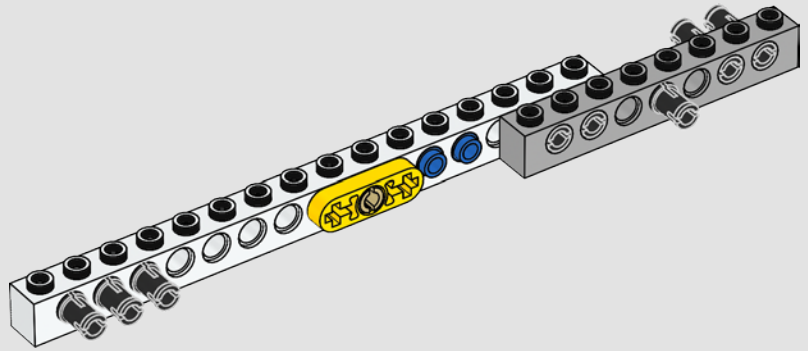

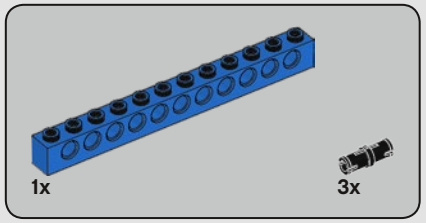

5

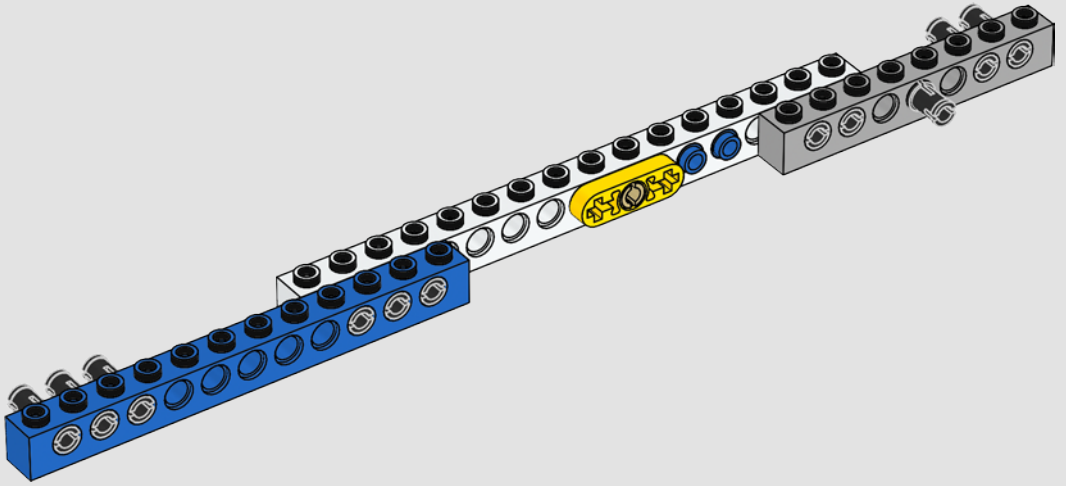

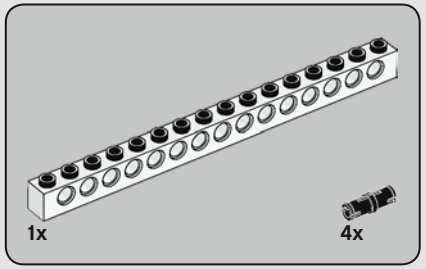

6

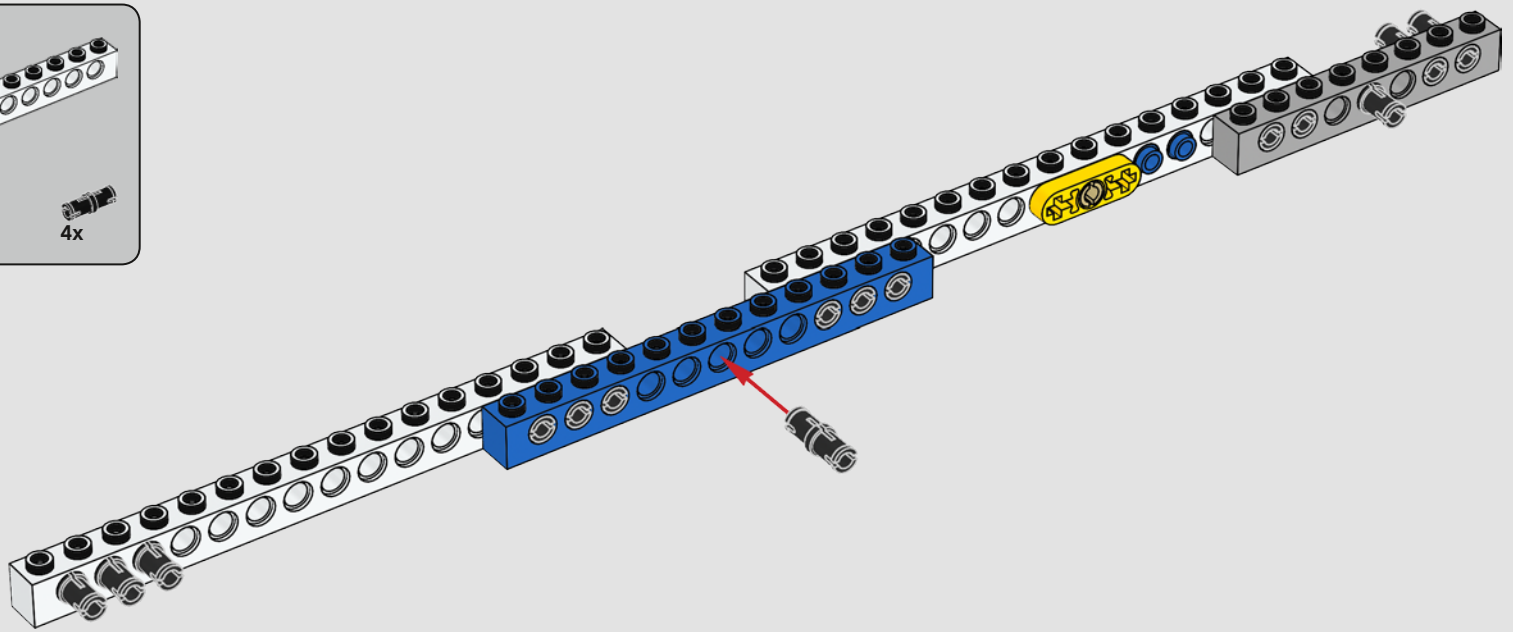

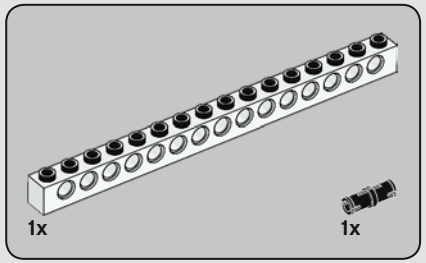

7

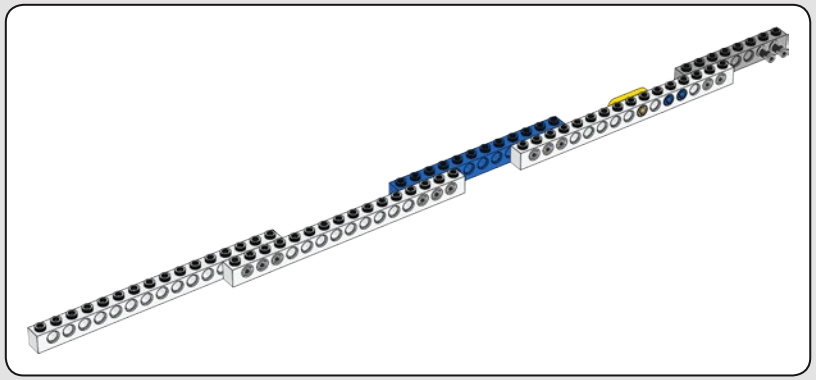

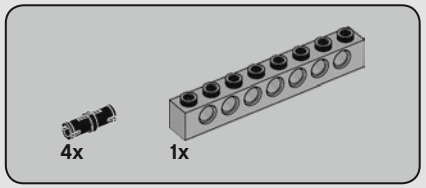

8

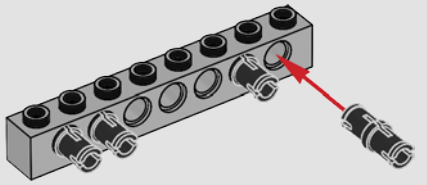

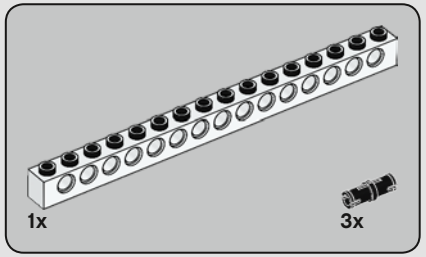

9

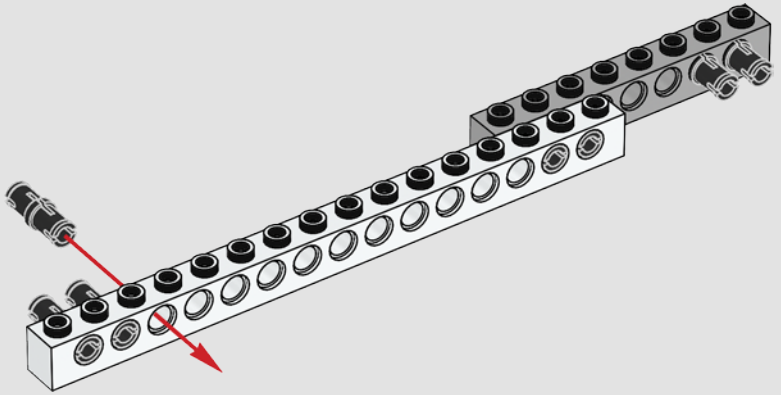

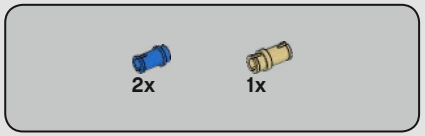

10

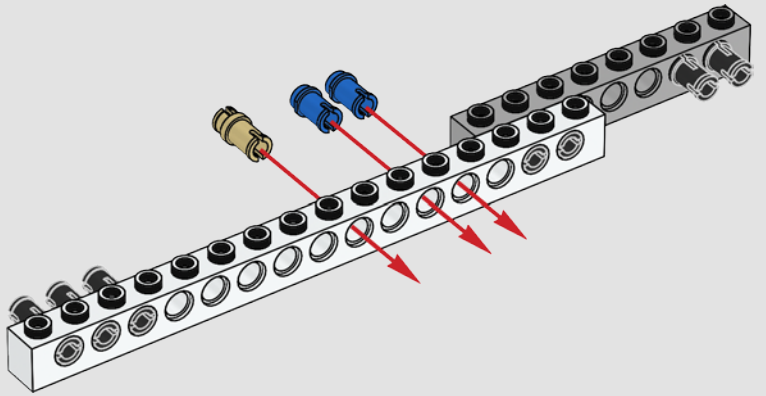

11

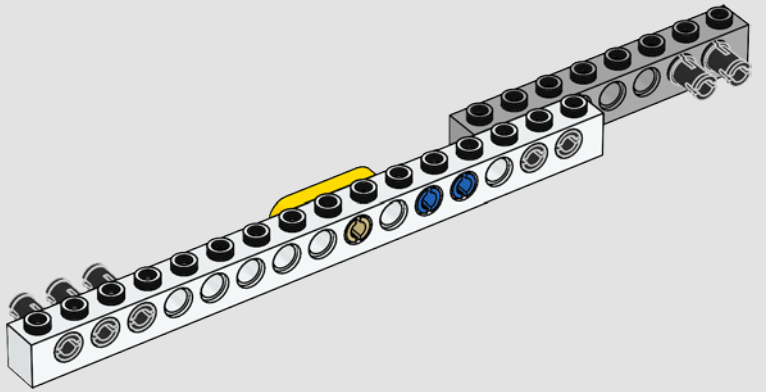

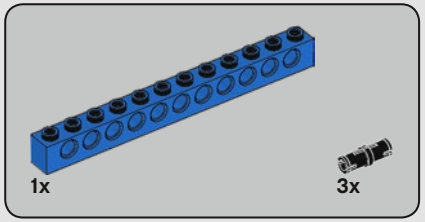

12

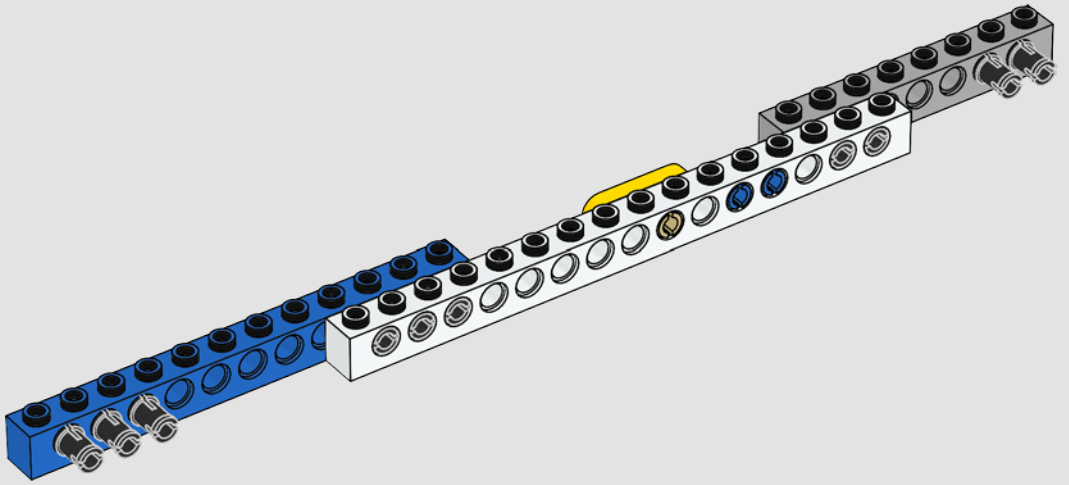

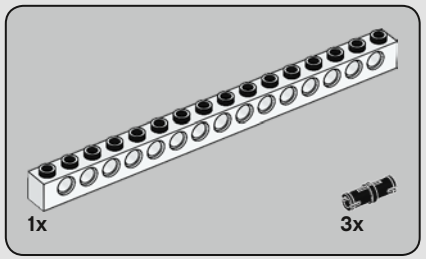

13

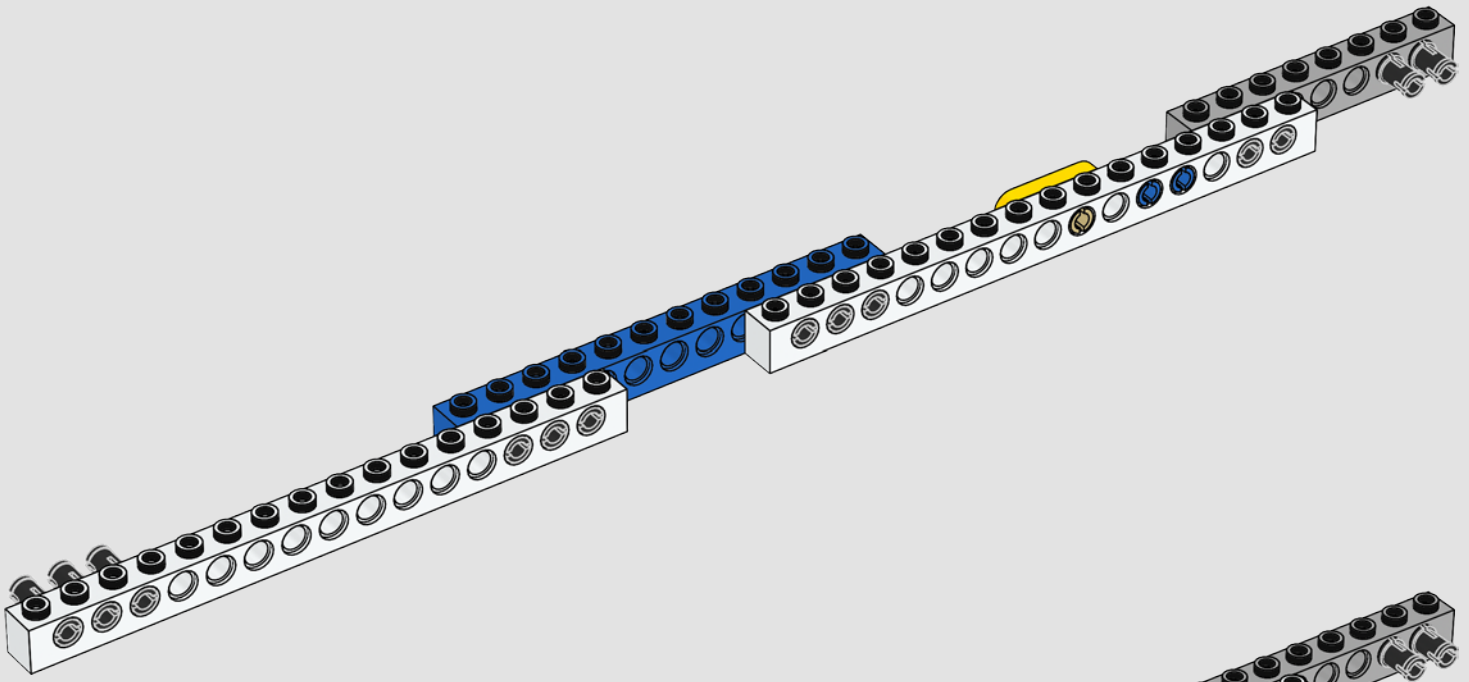

14

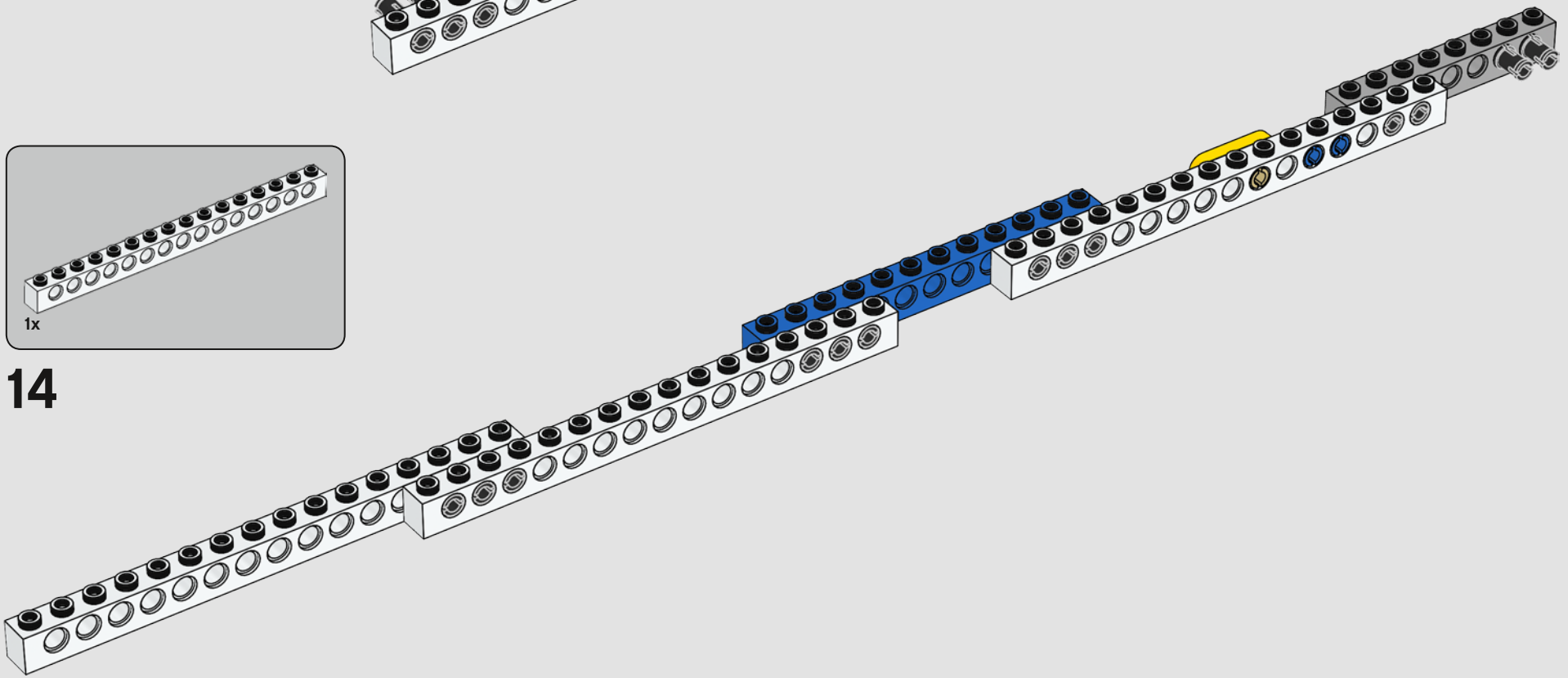

15

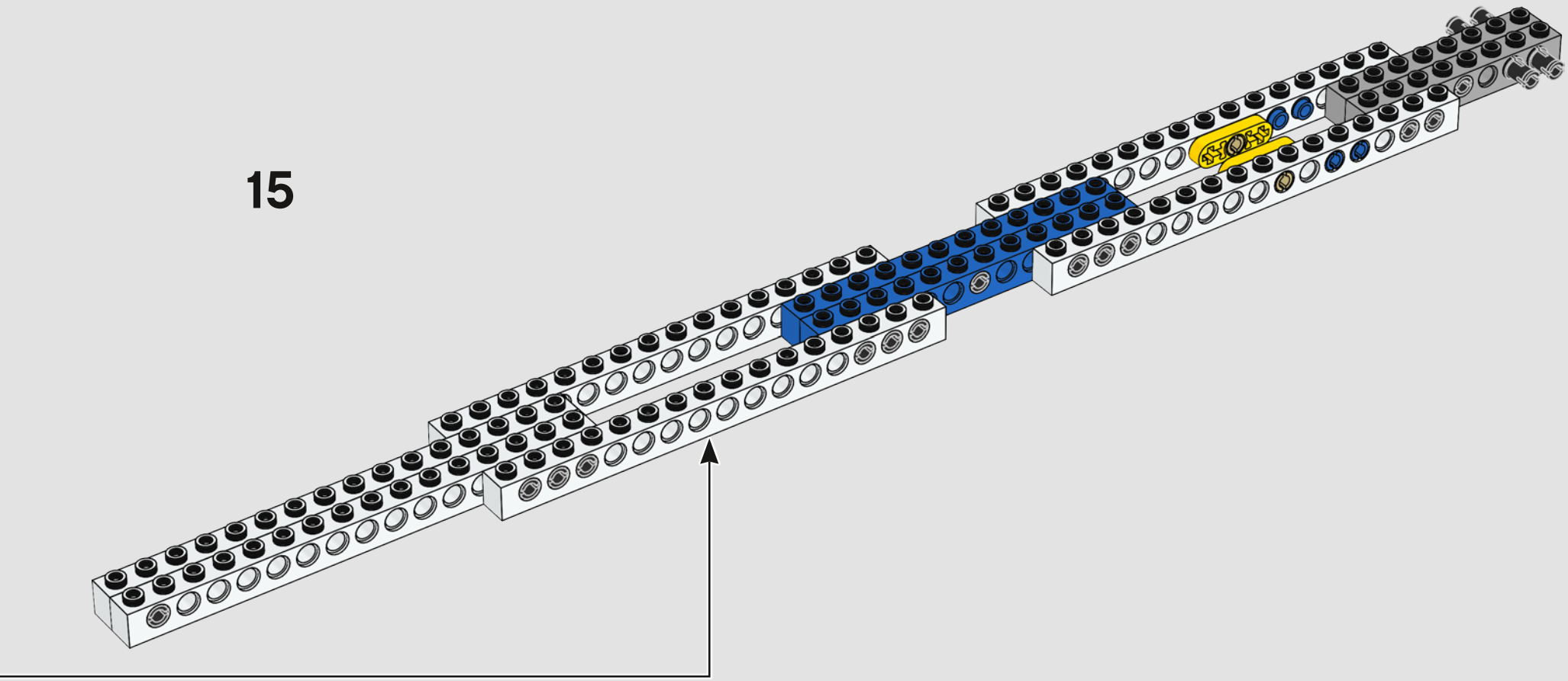

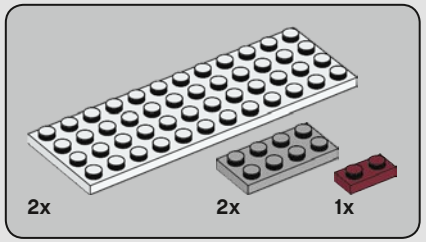

16

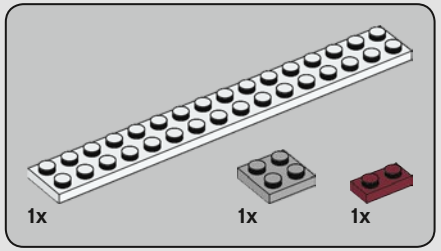

17

18

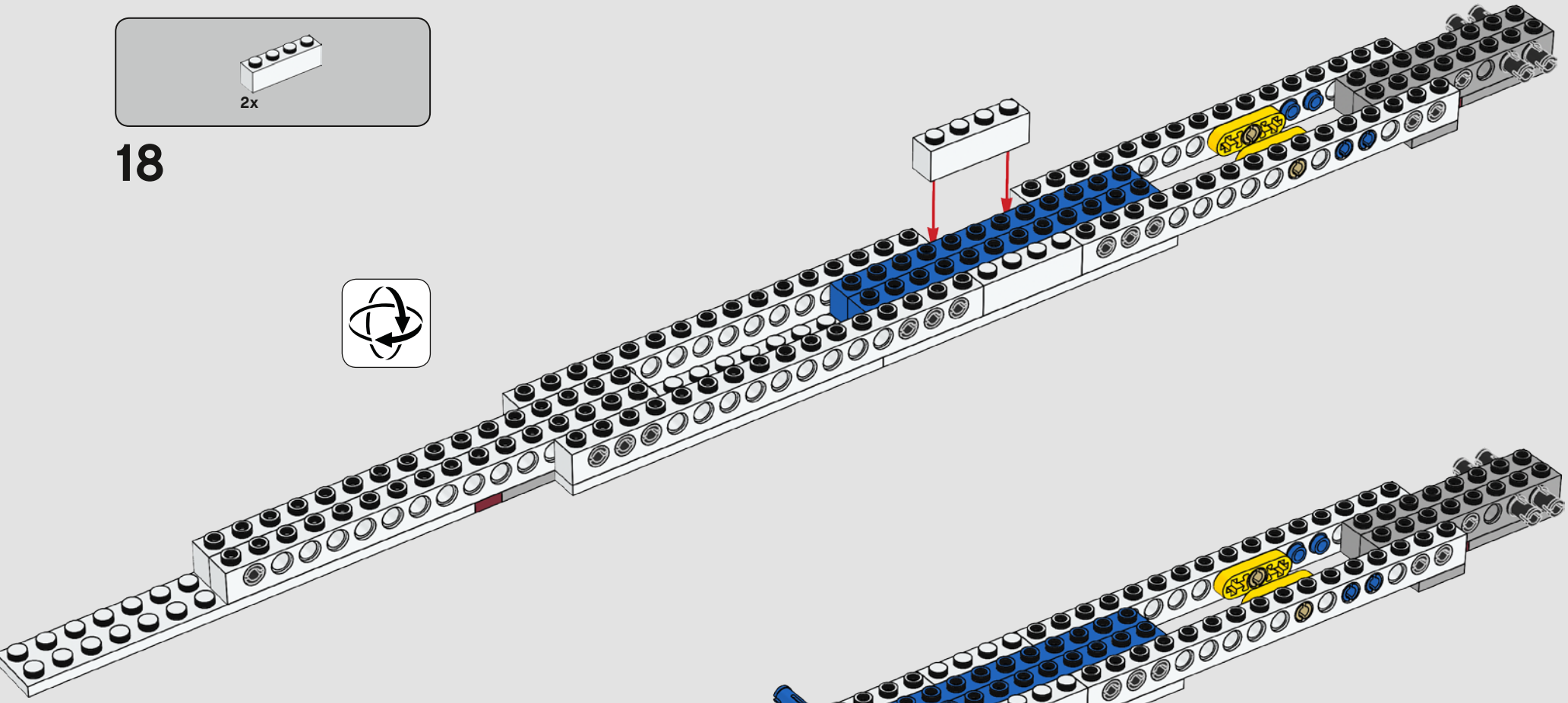

19

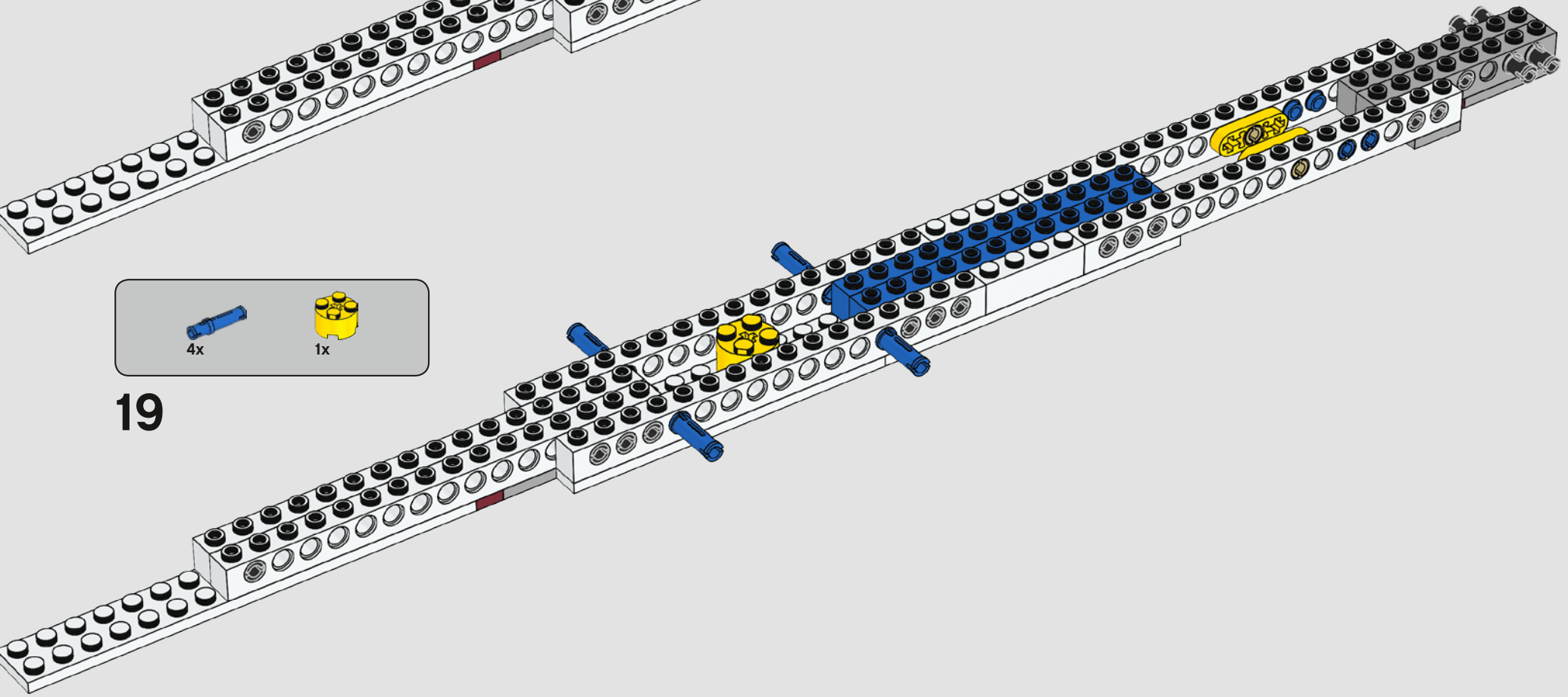

4x

20

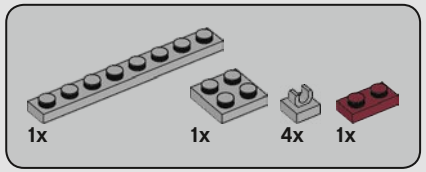

21

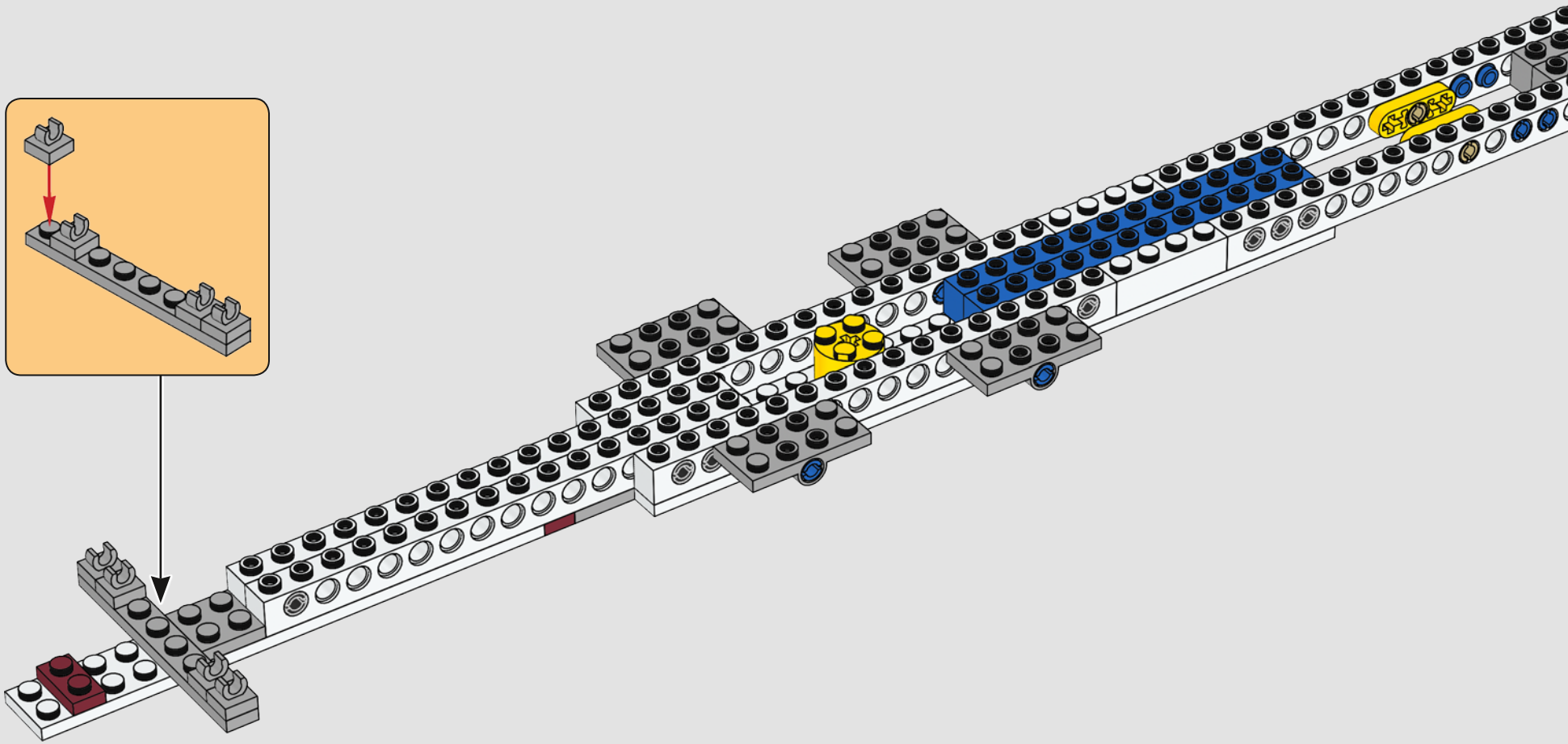

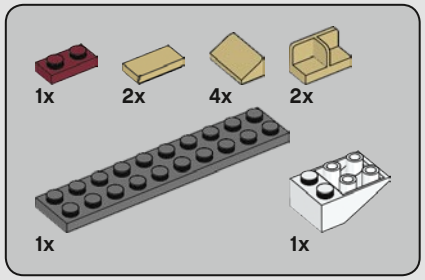

22

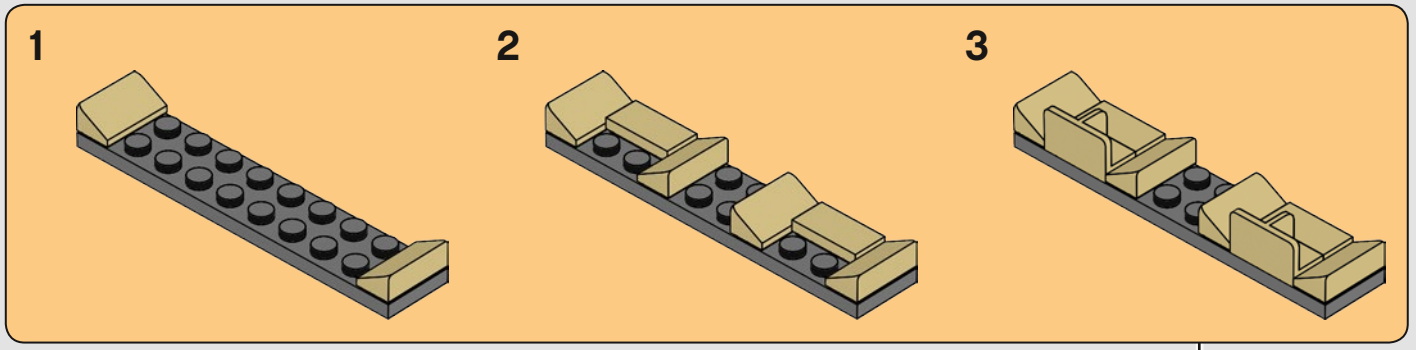

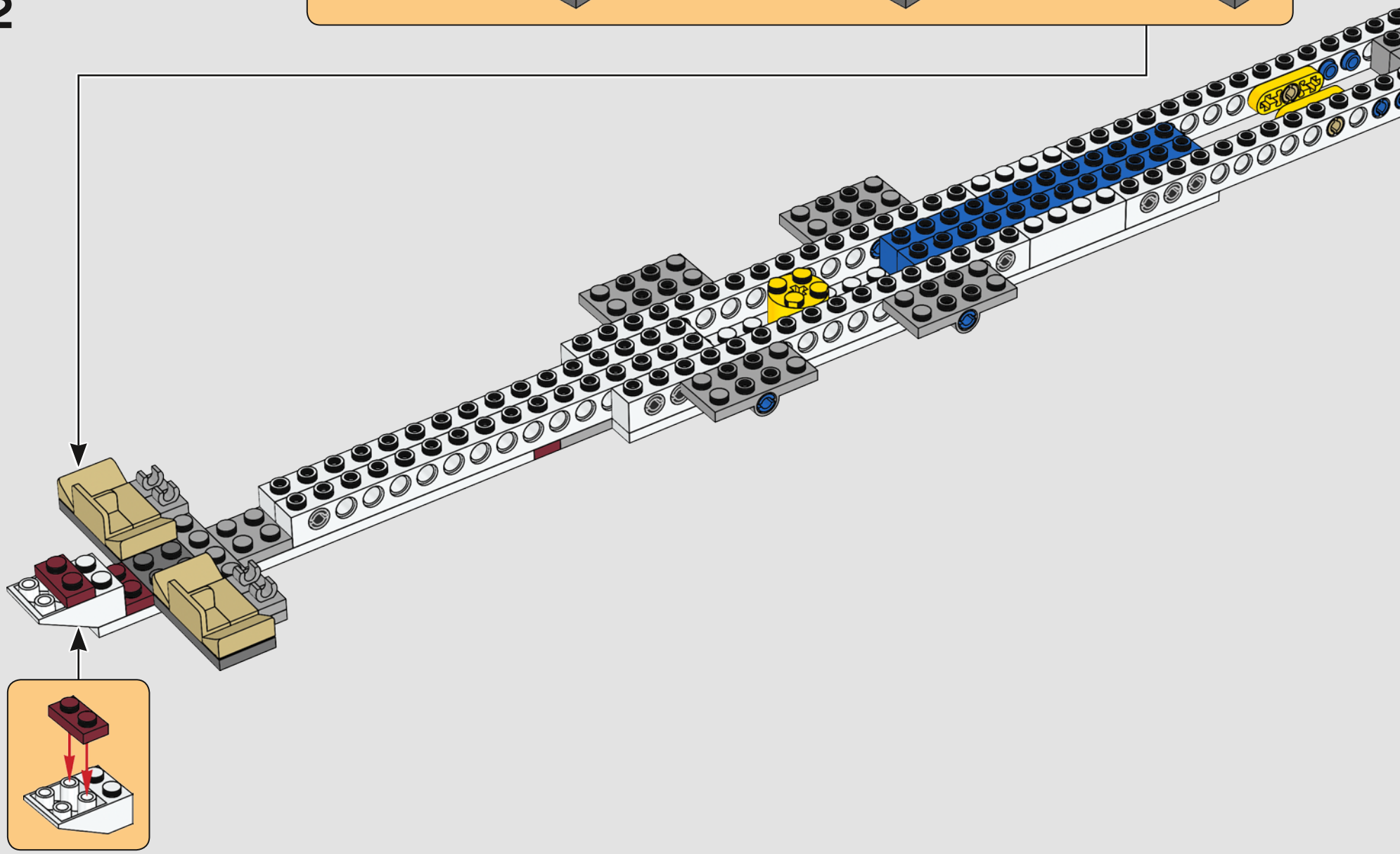

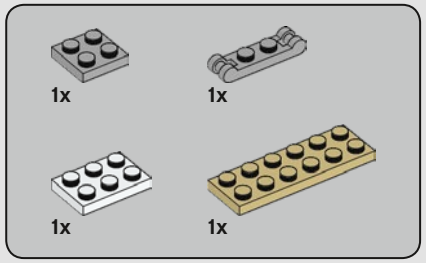

23

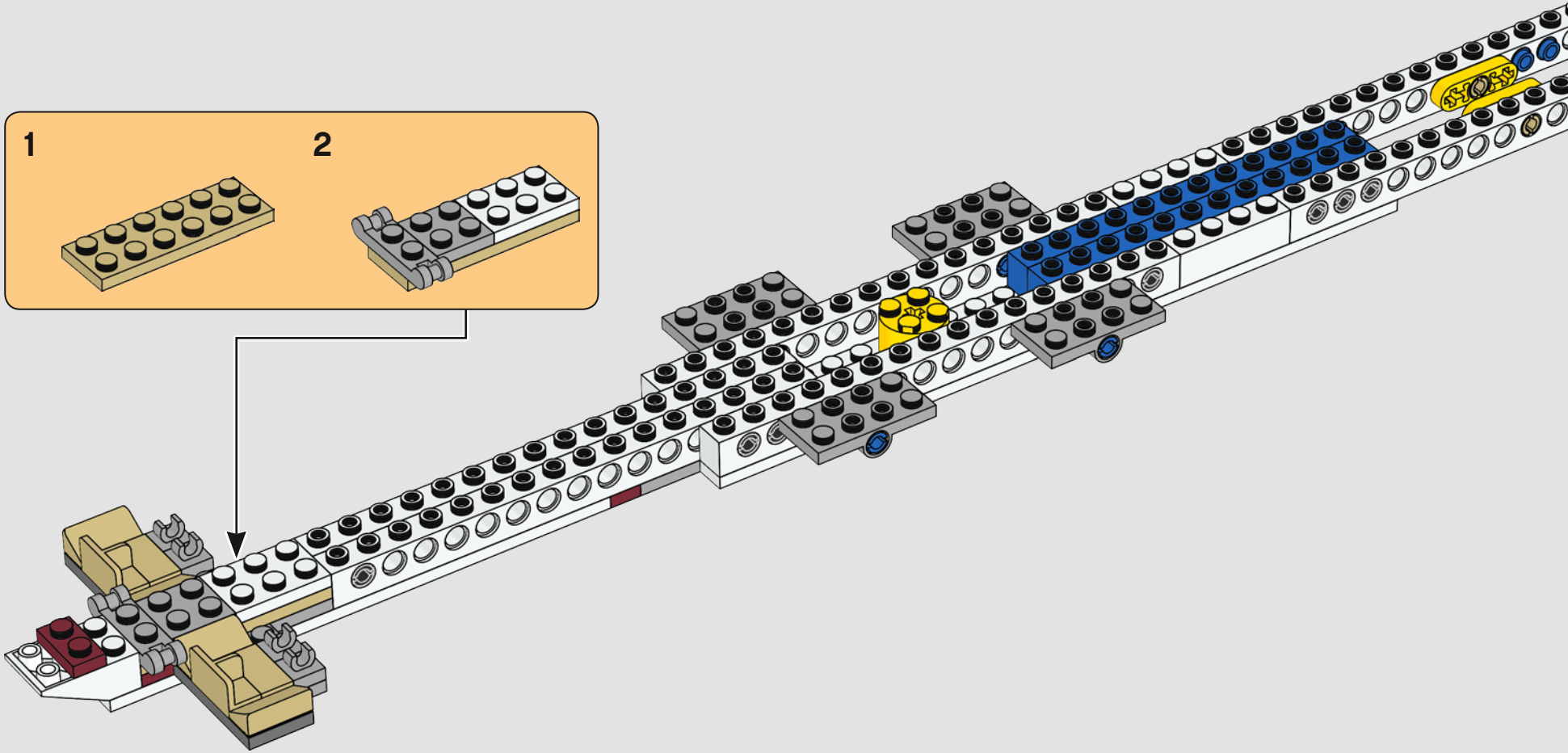

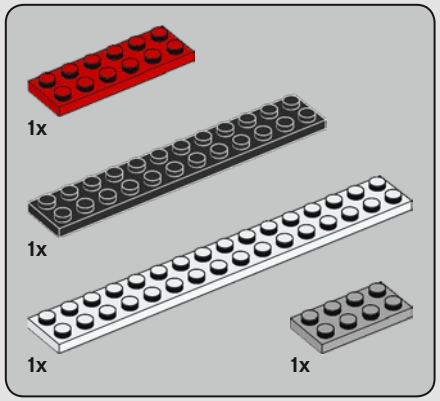

24

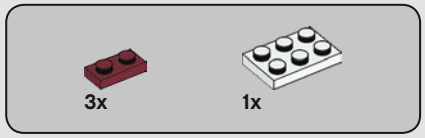

25

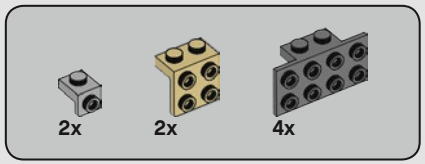

26

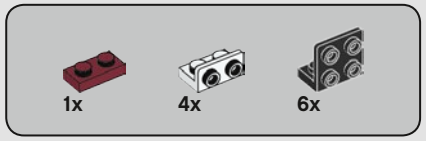

27

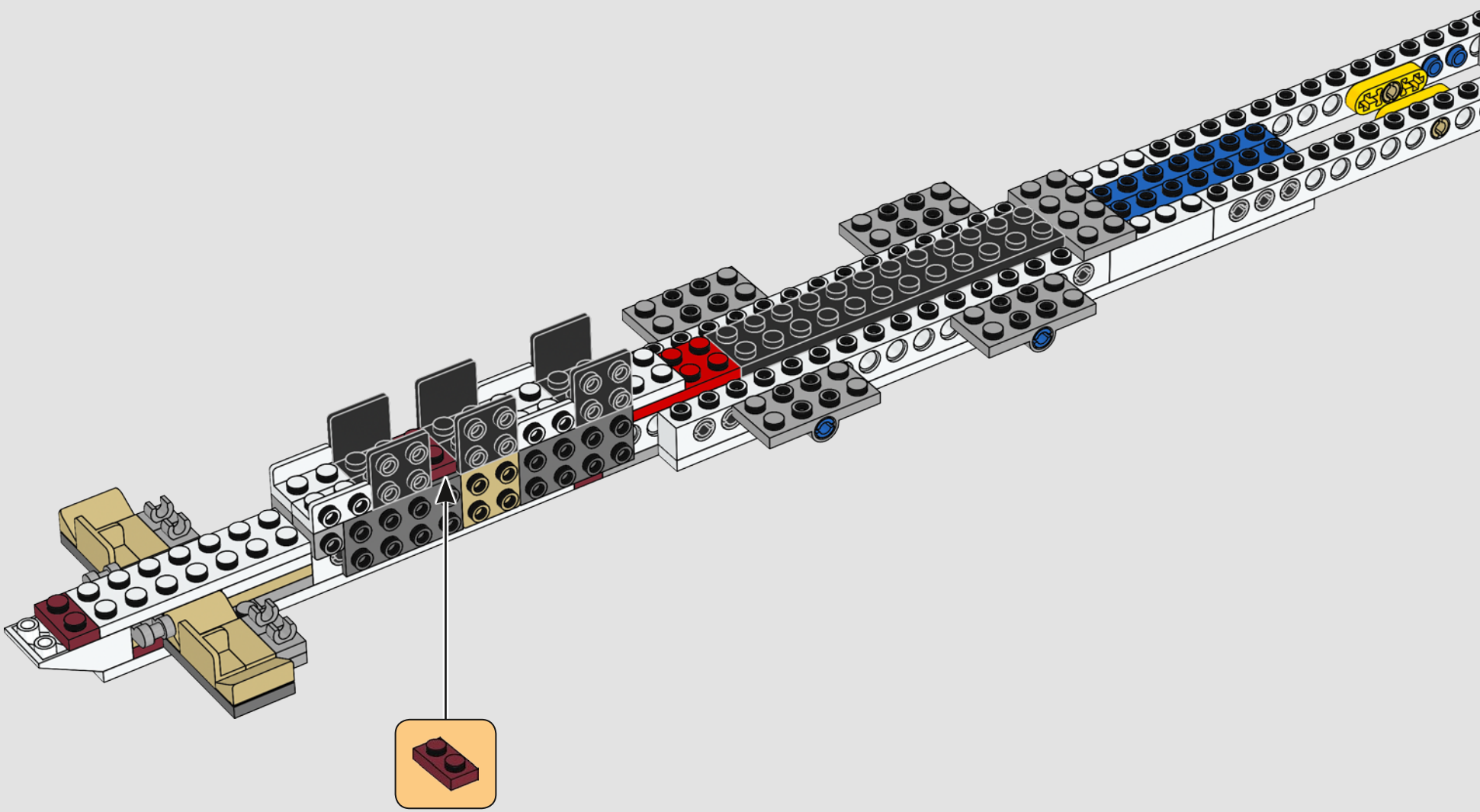

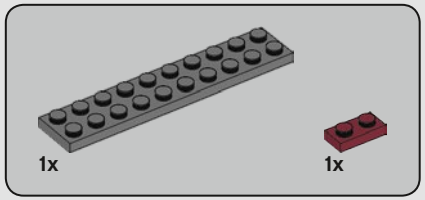

28

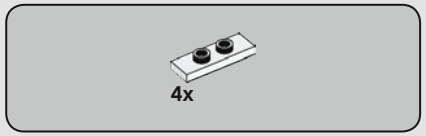

29

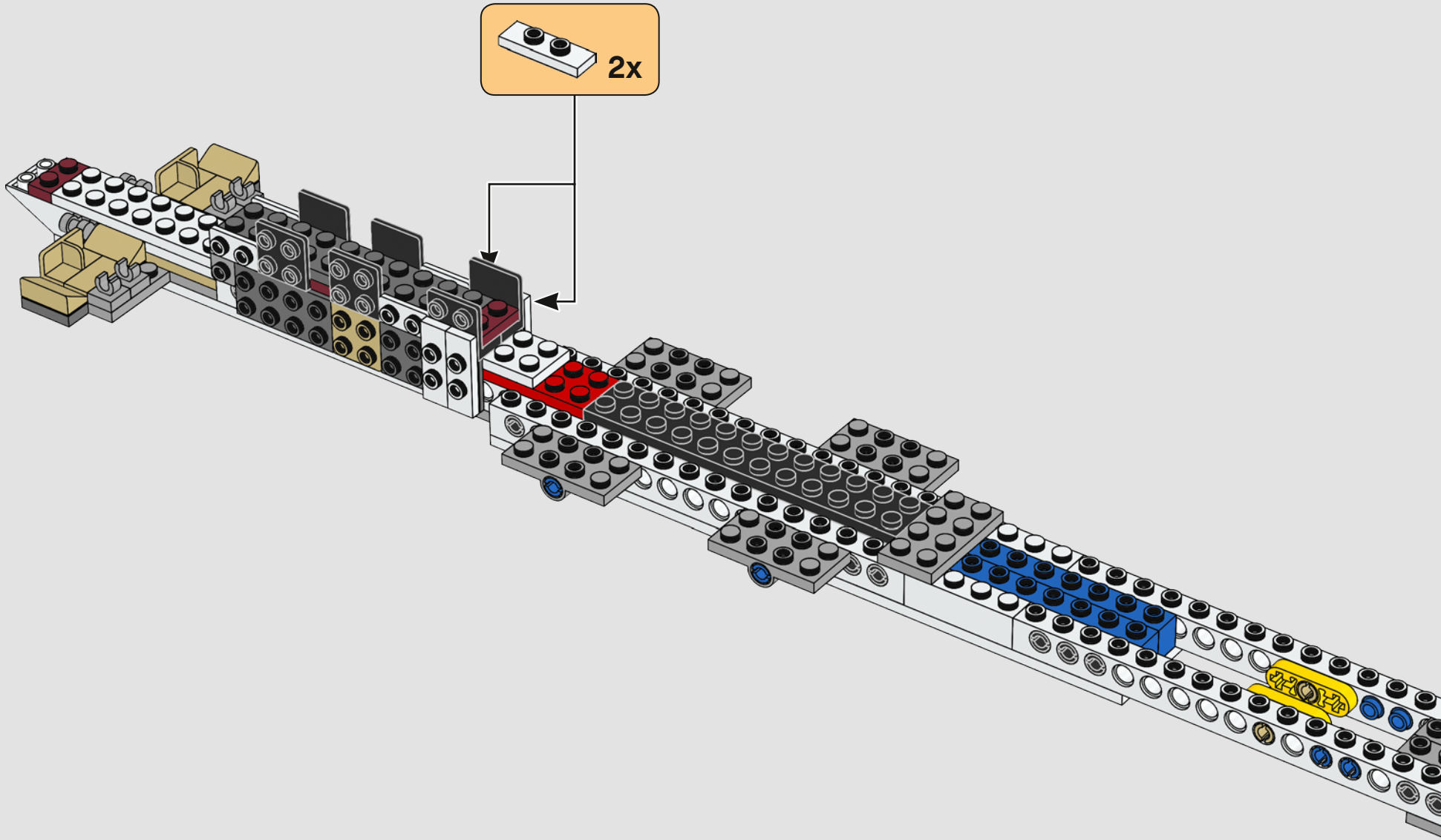

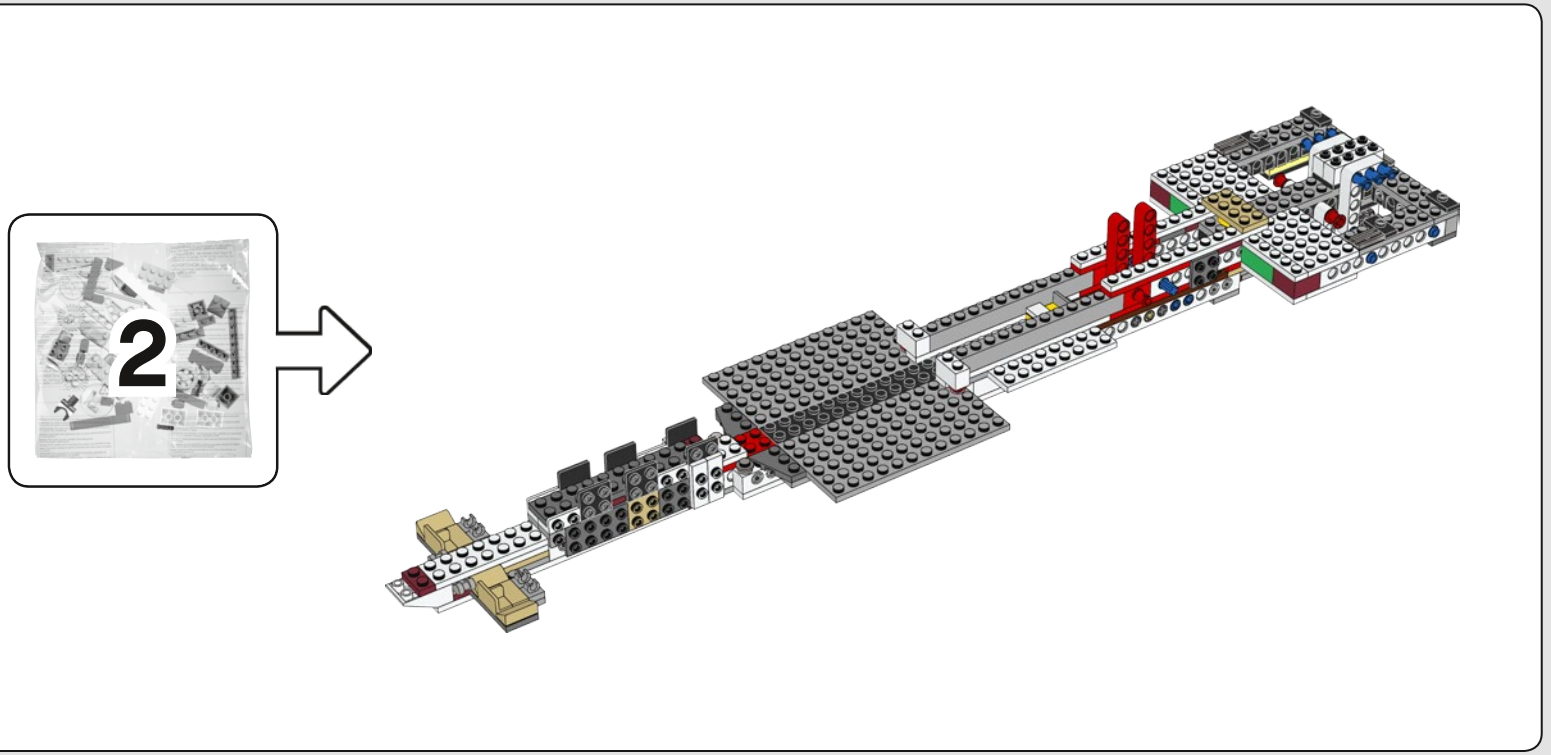
2

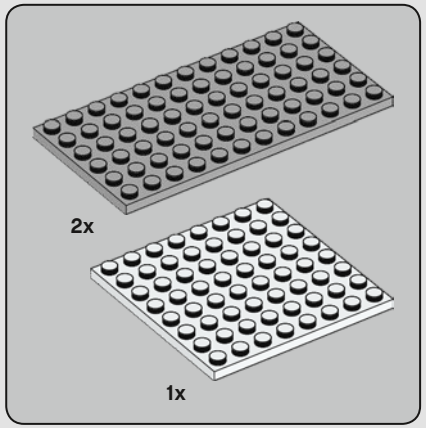

30

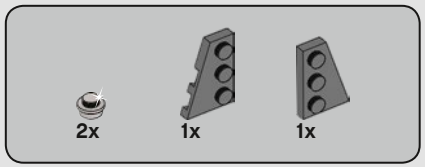

31

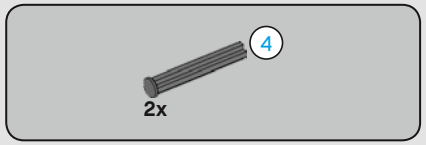

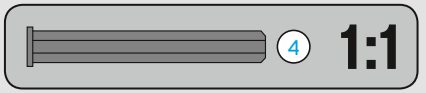

32

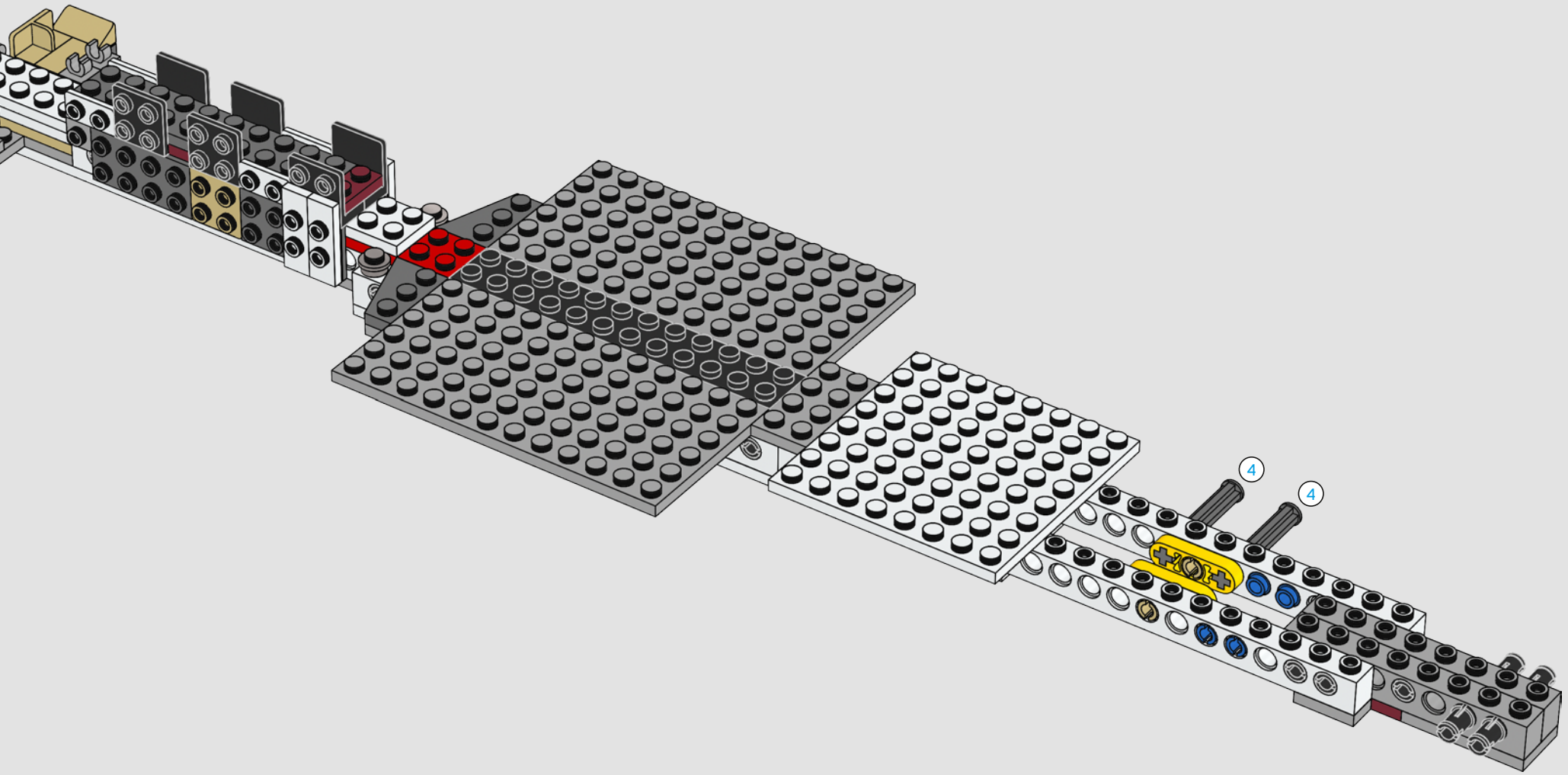

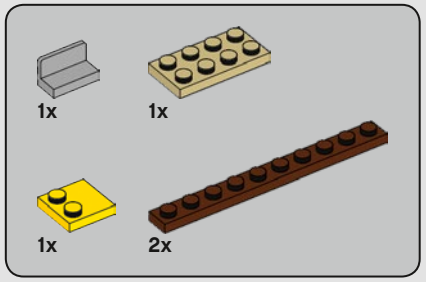

33

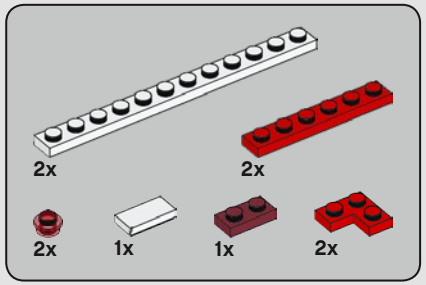

34

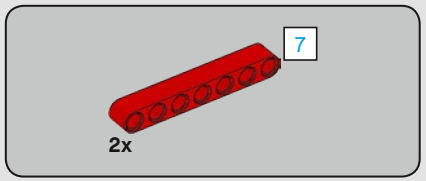

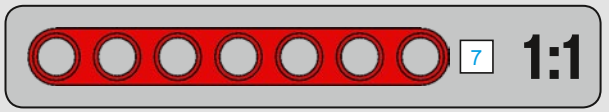

35

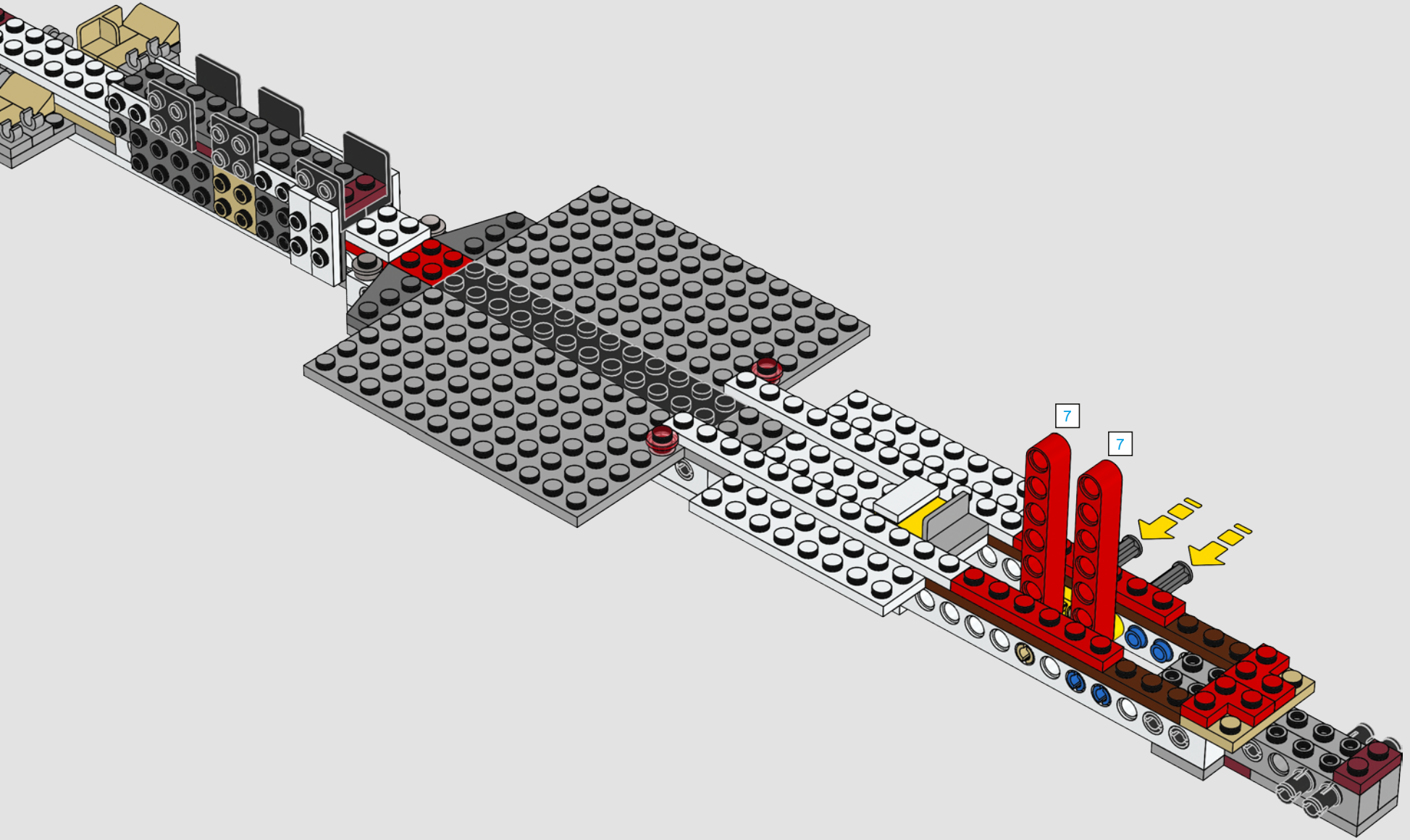

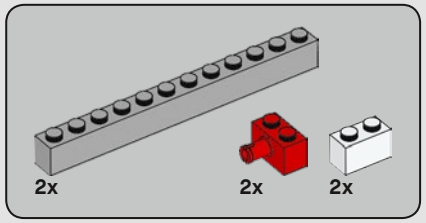

36

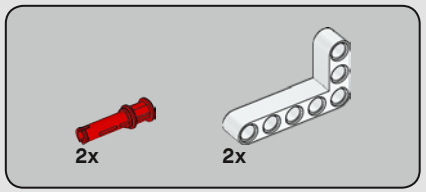

37

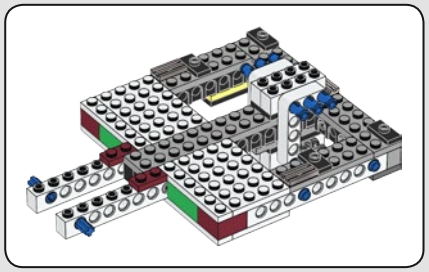

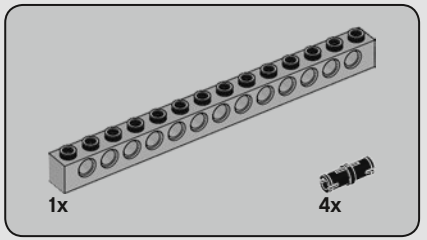

38

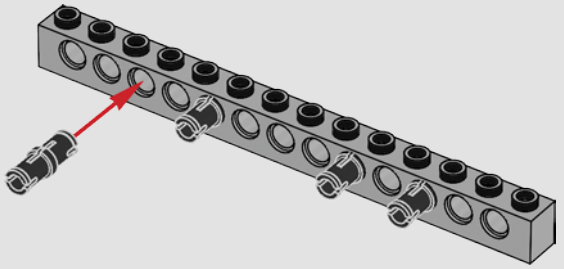

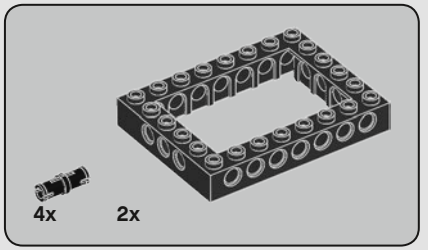

39

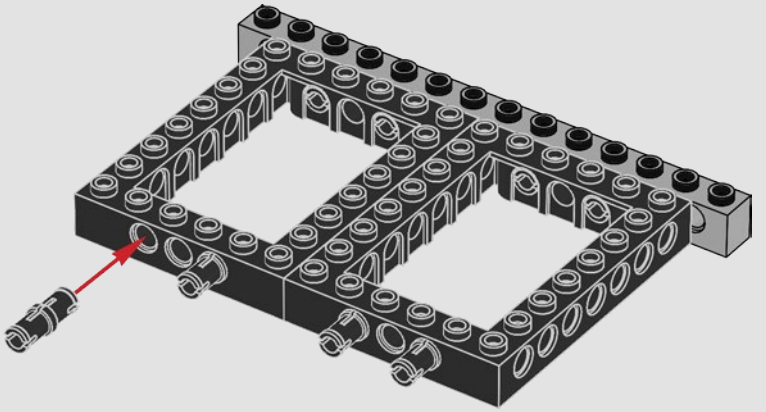

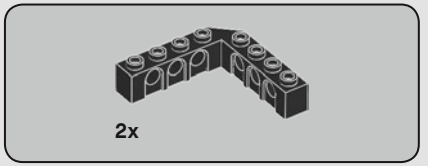

40

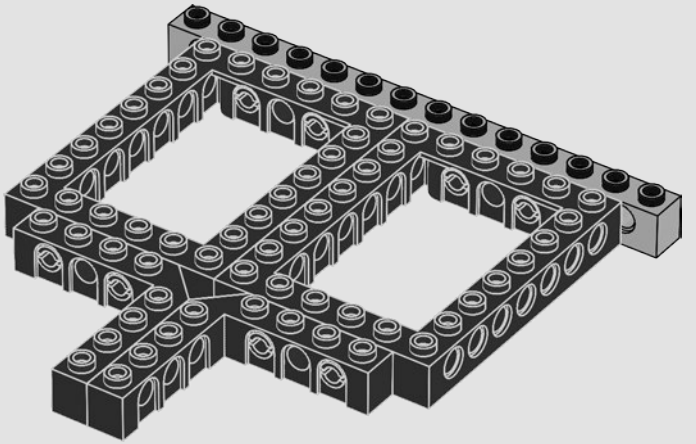

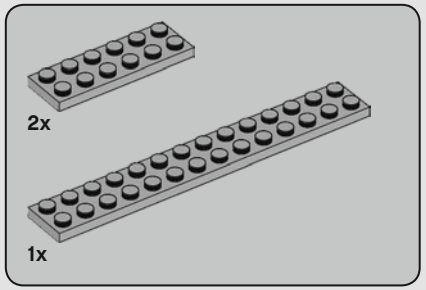

41

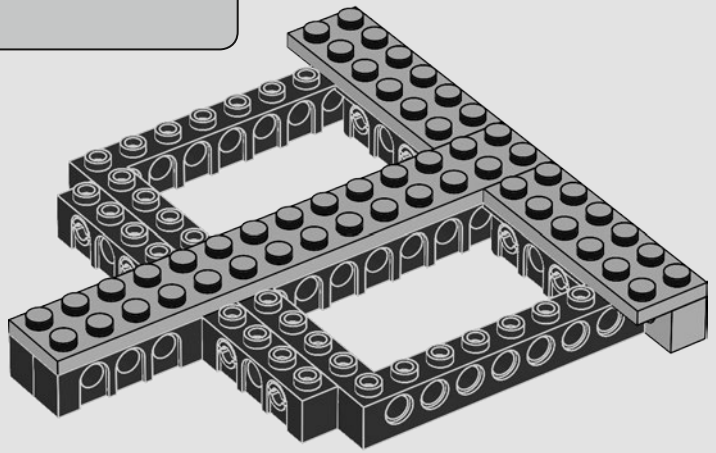

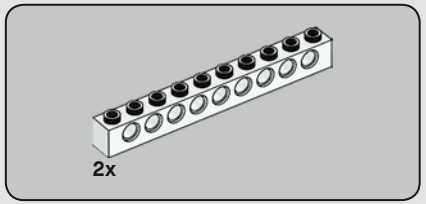

42

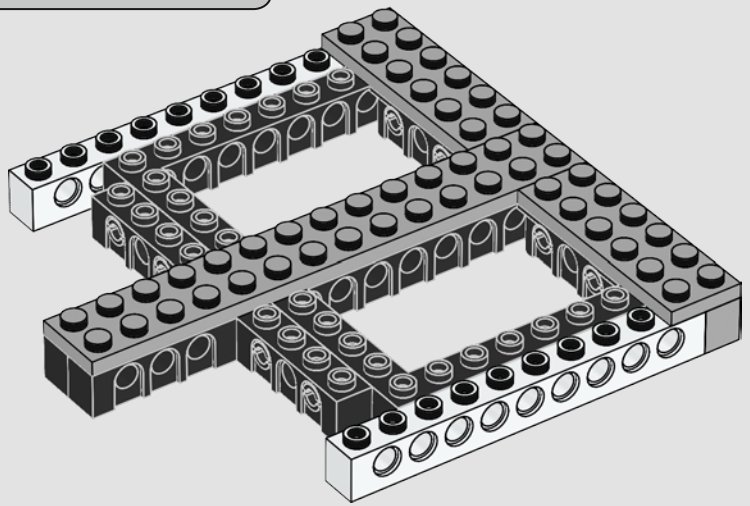

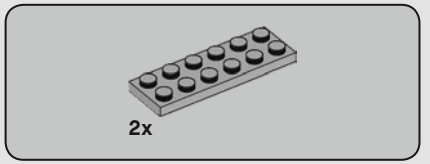

43

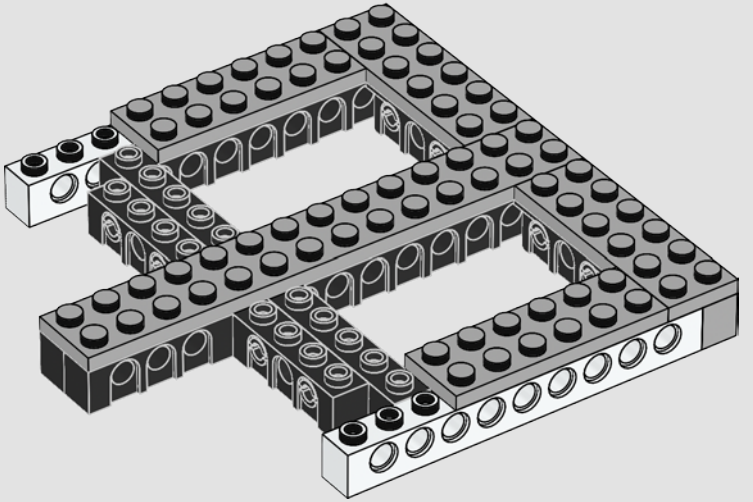

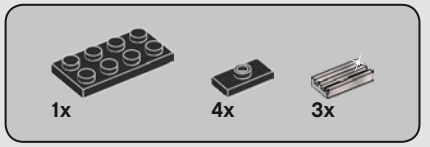

44

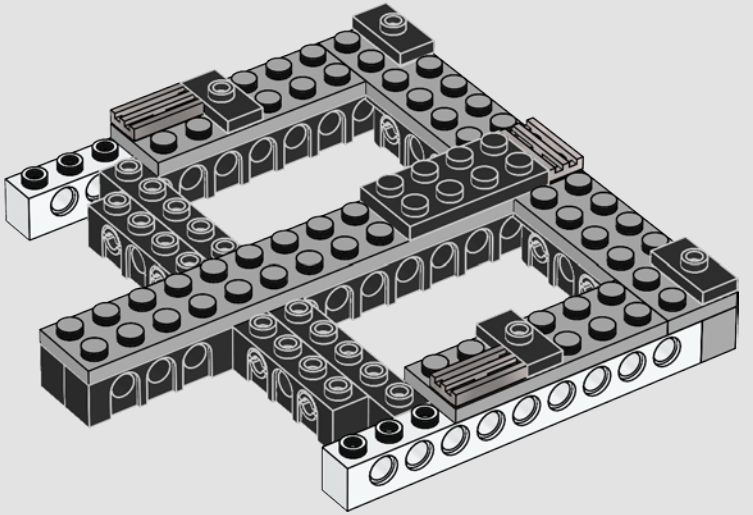

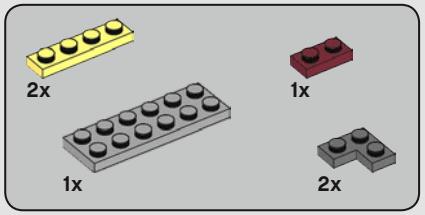

45

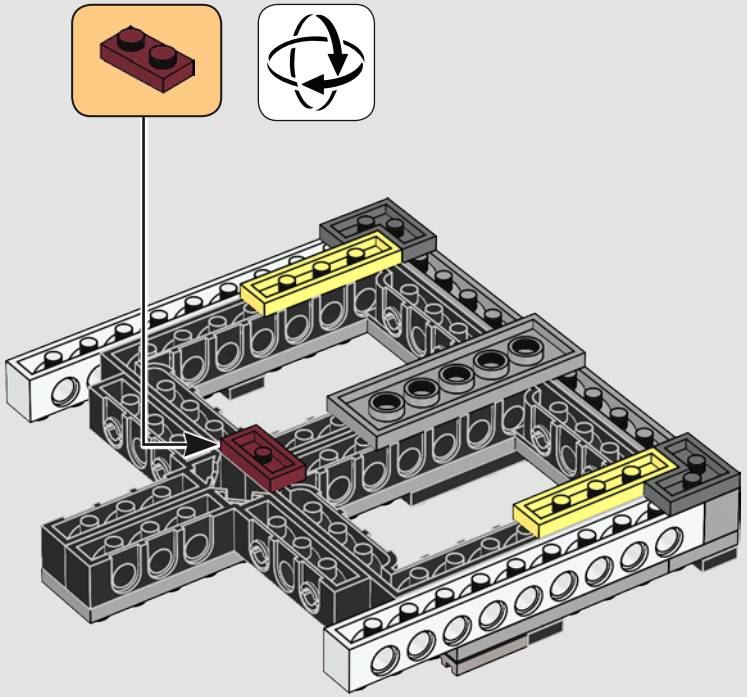

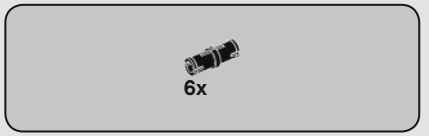

46

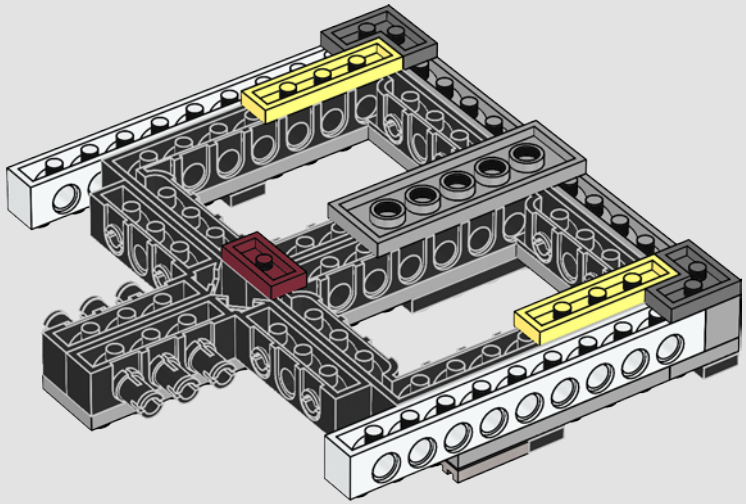

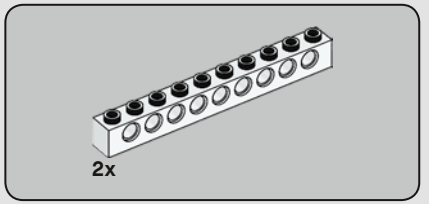

47

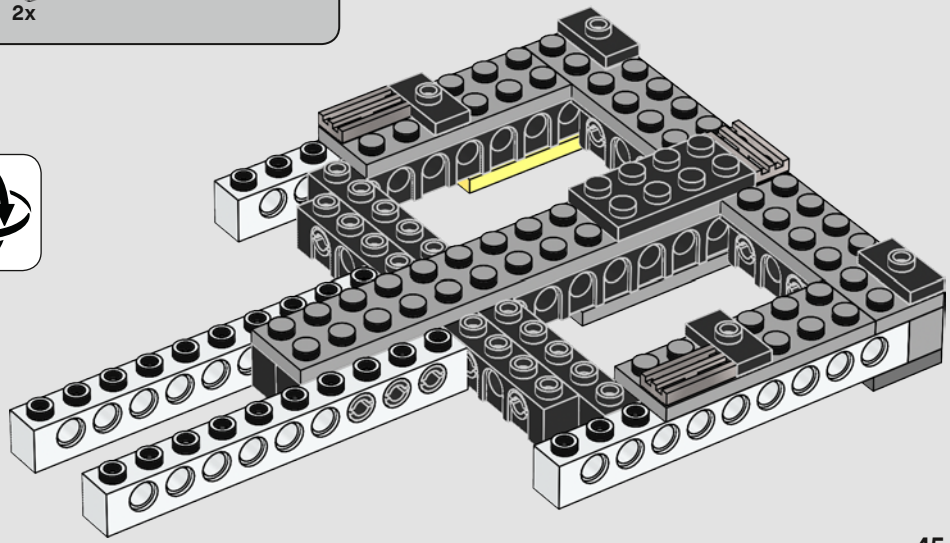

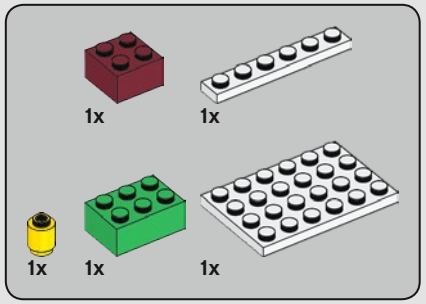

48

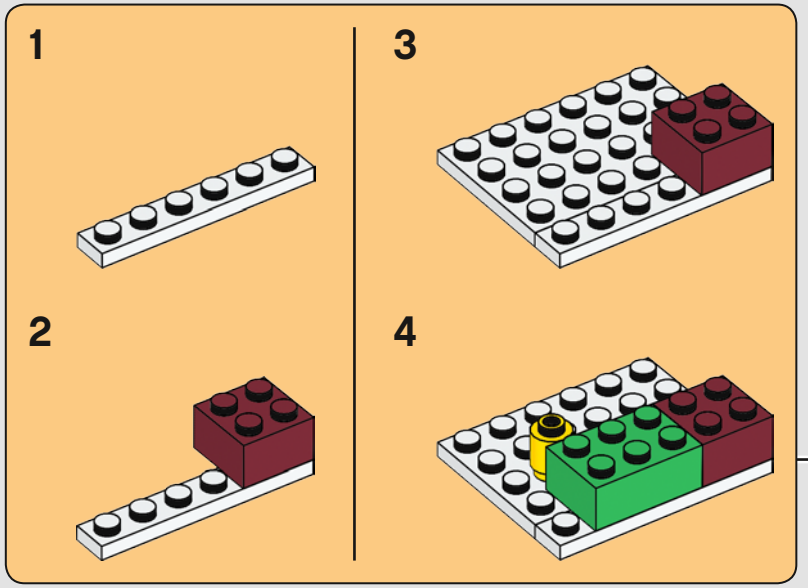

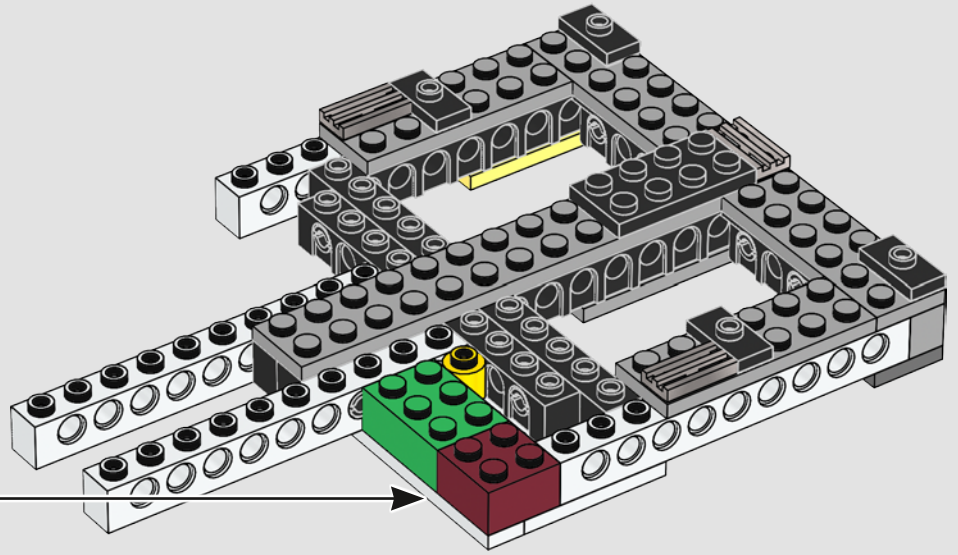

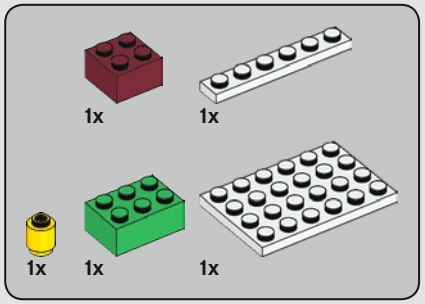

49

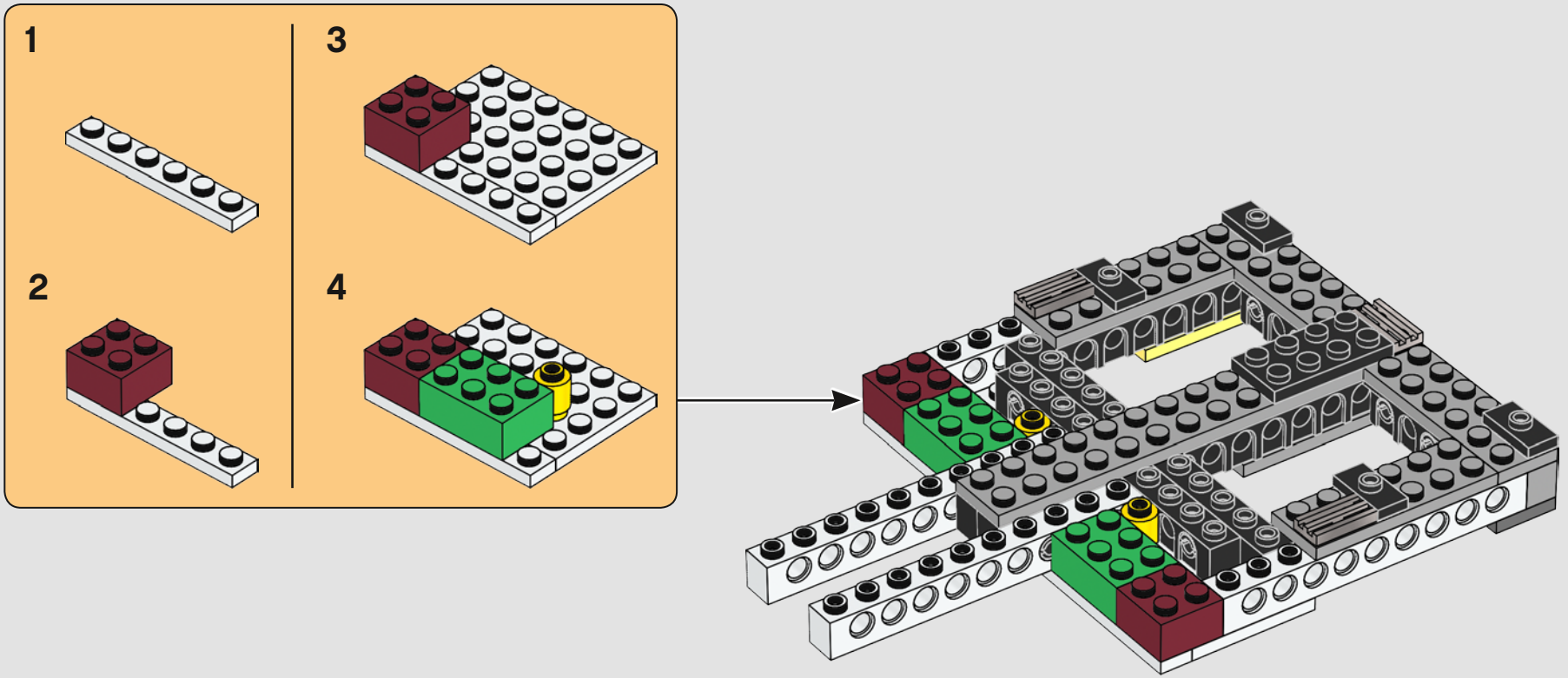

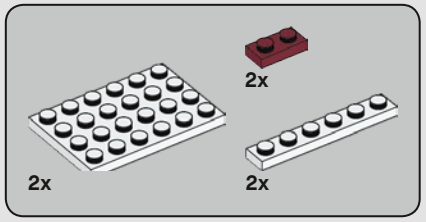

50

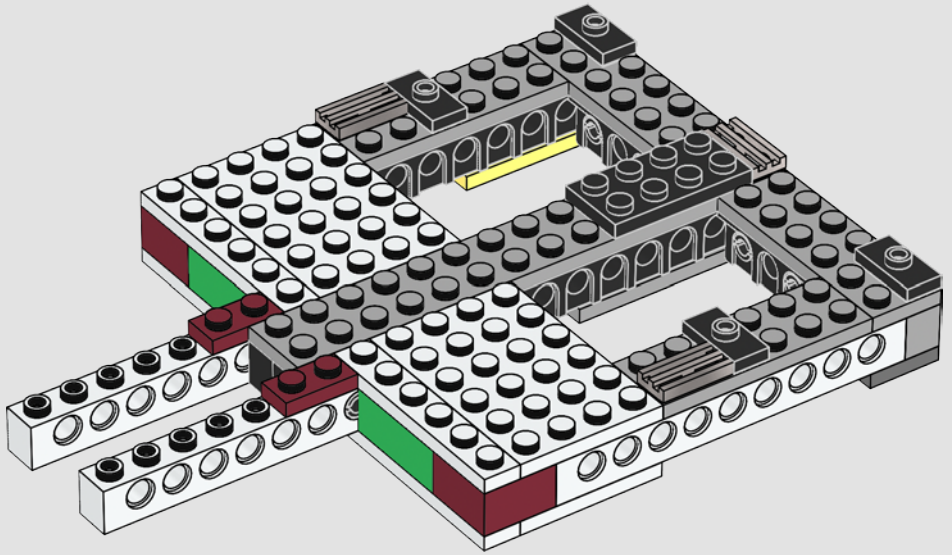

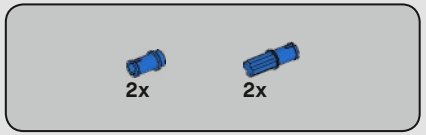

51

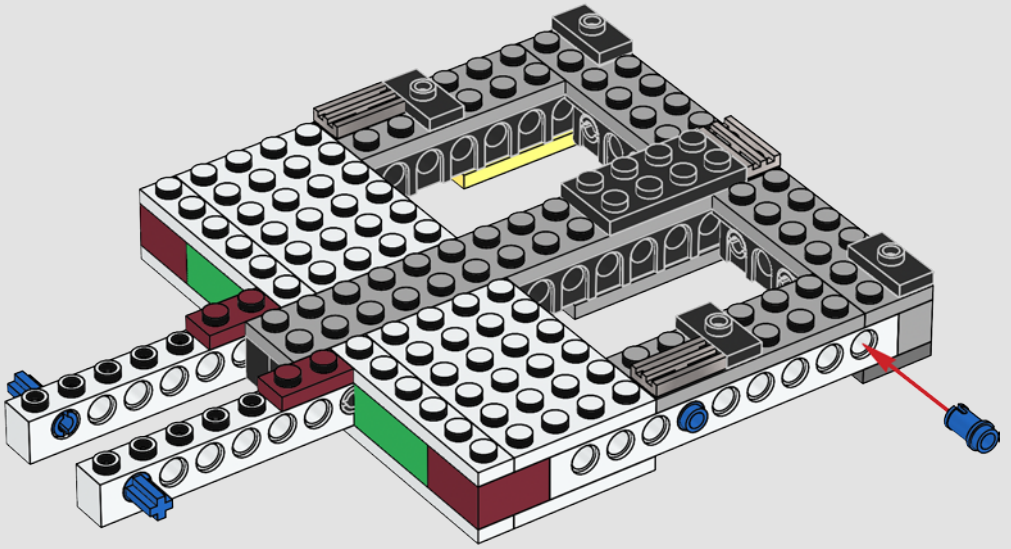

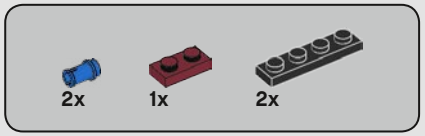

52

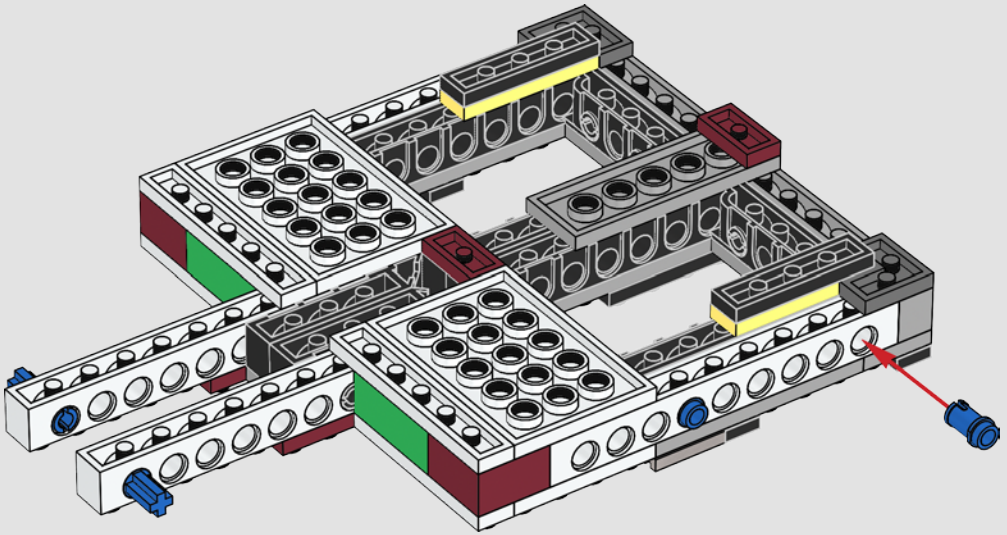

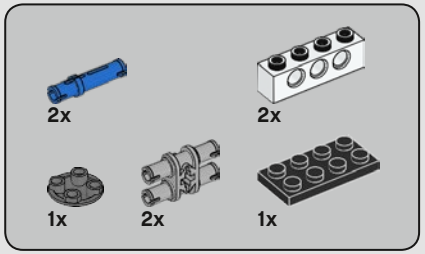

53

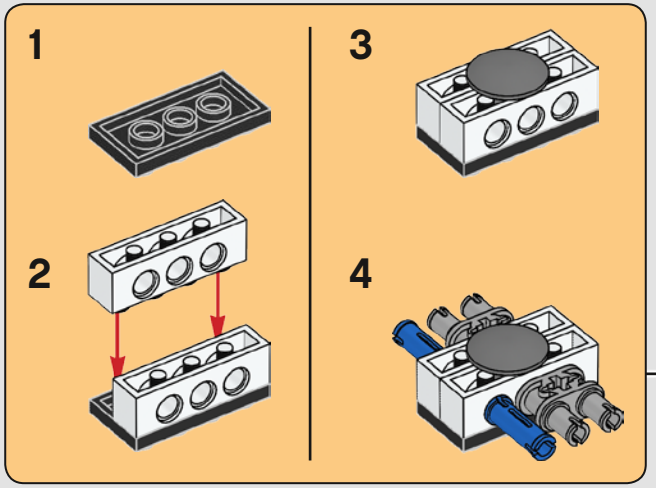

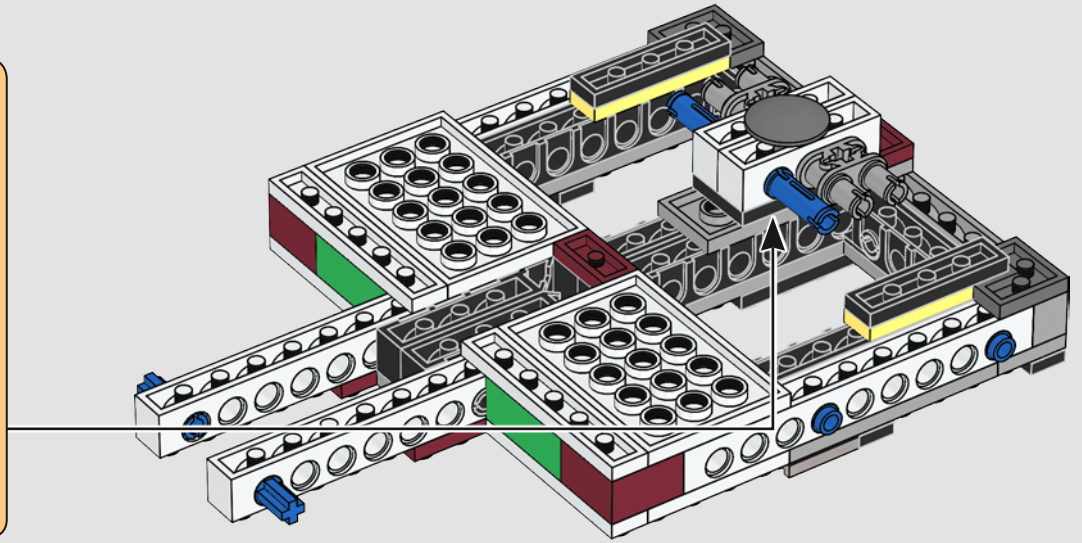

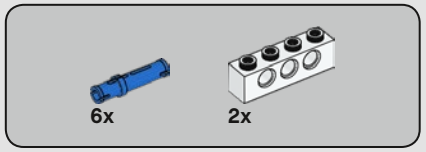

54

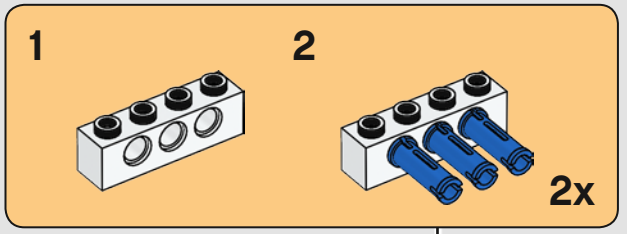

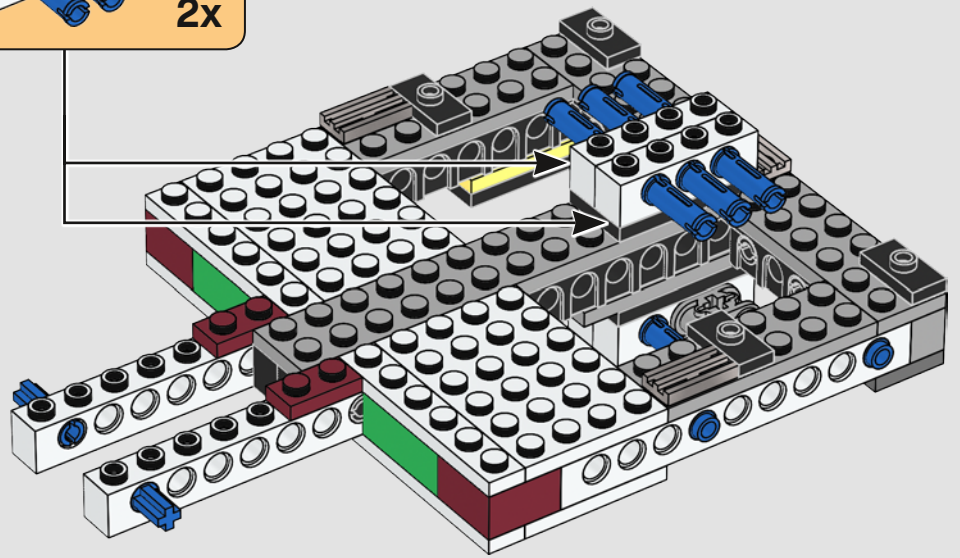

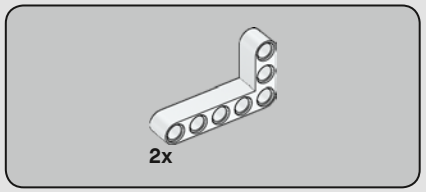

55

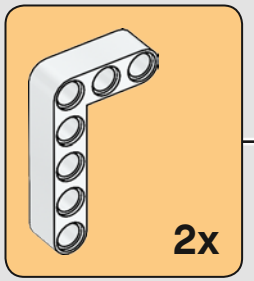

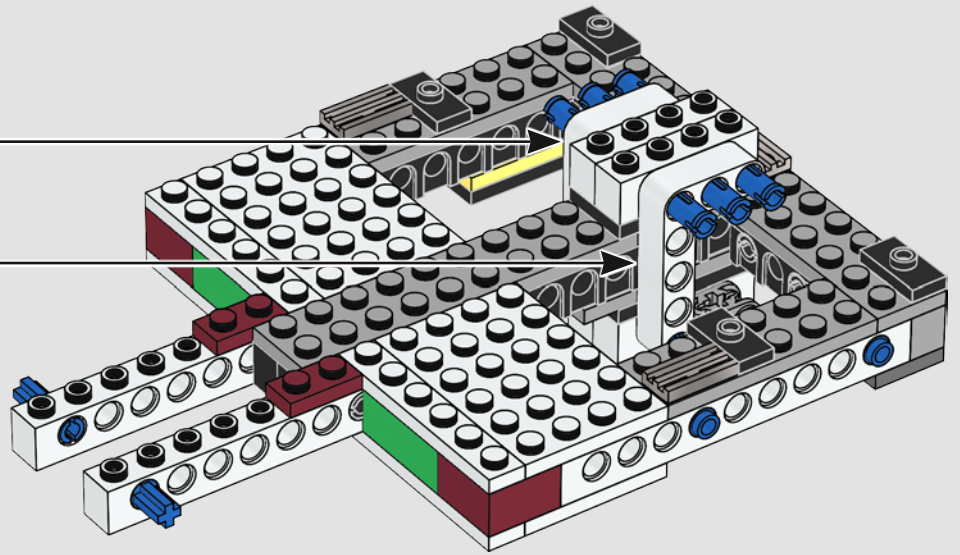

56

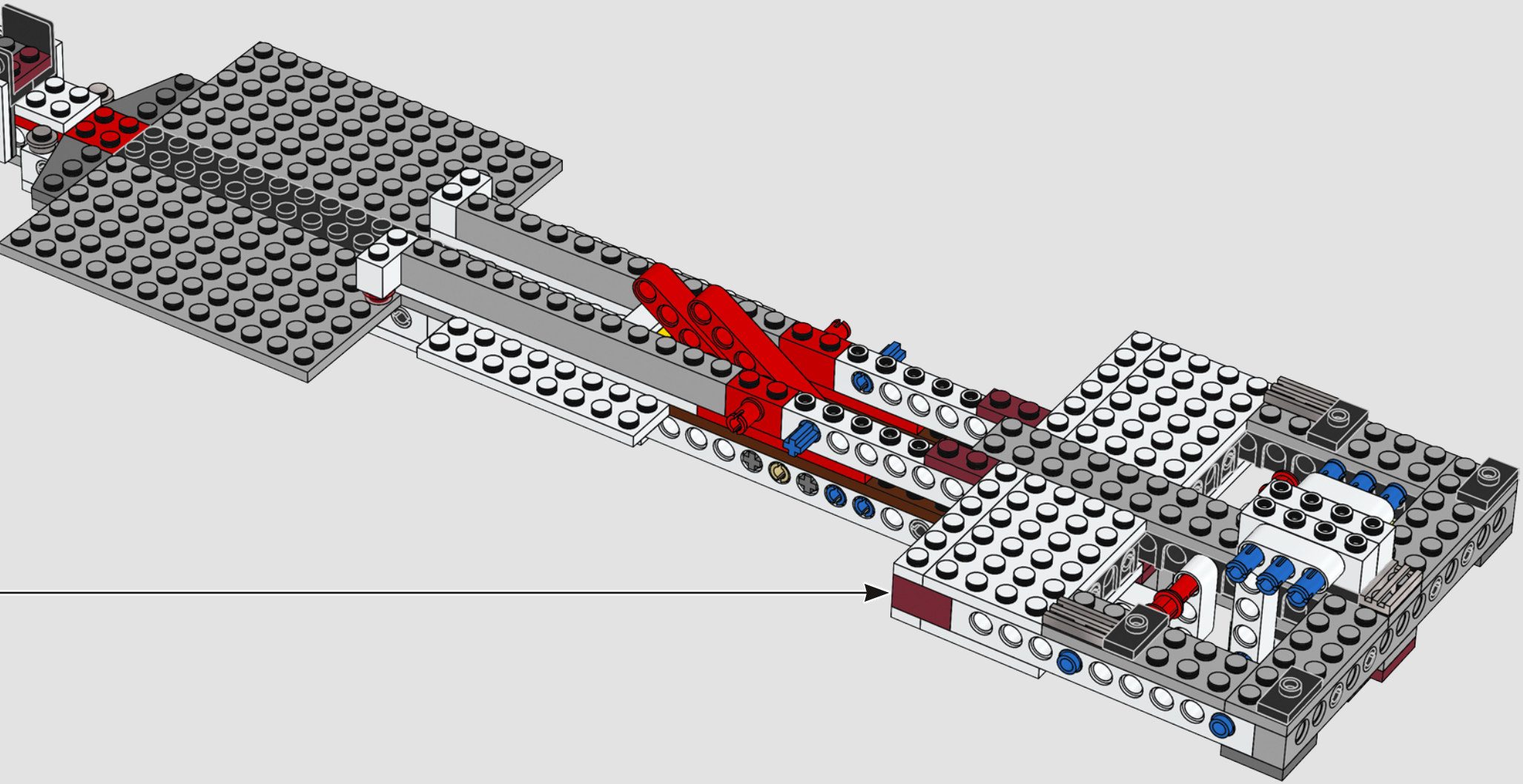

57

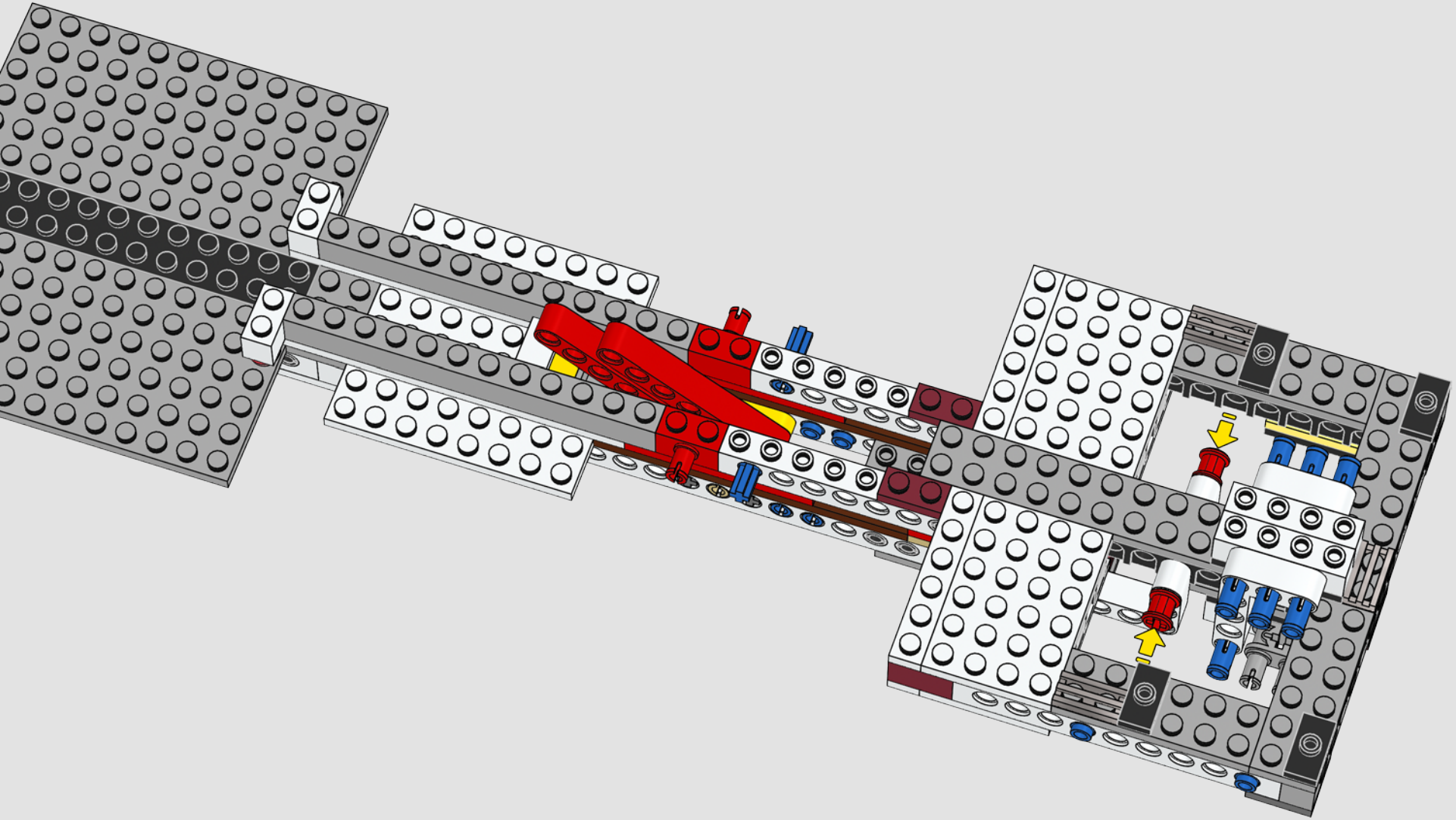

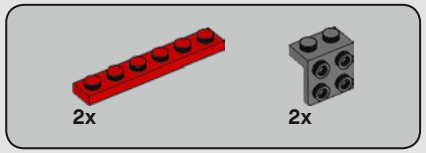

58

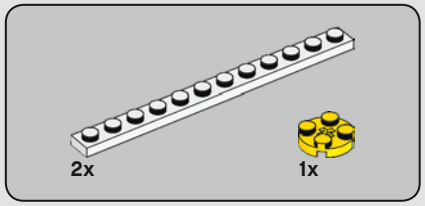

59

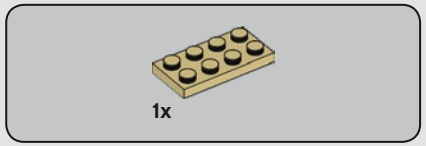

60

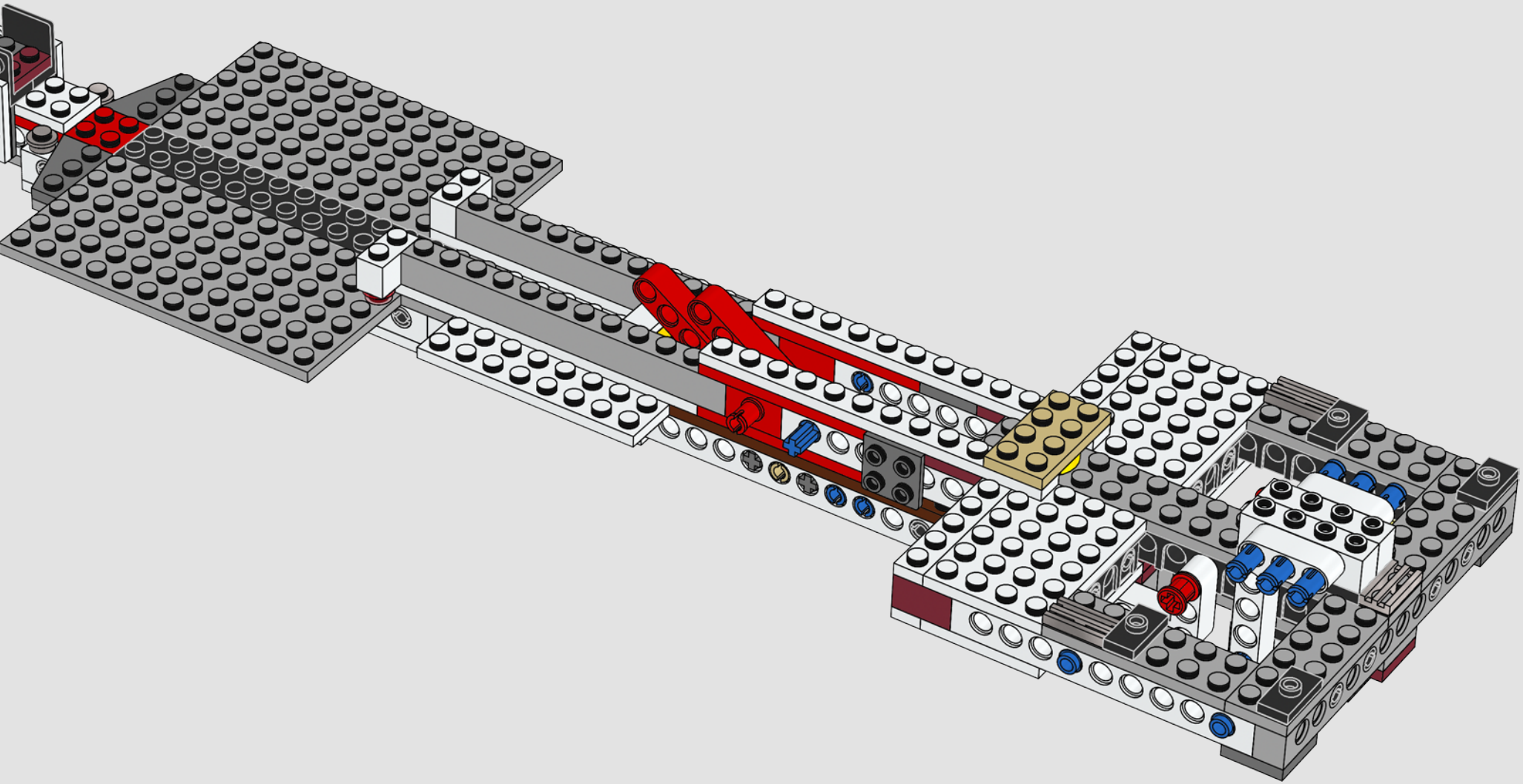

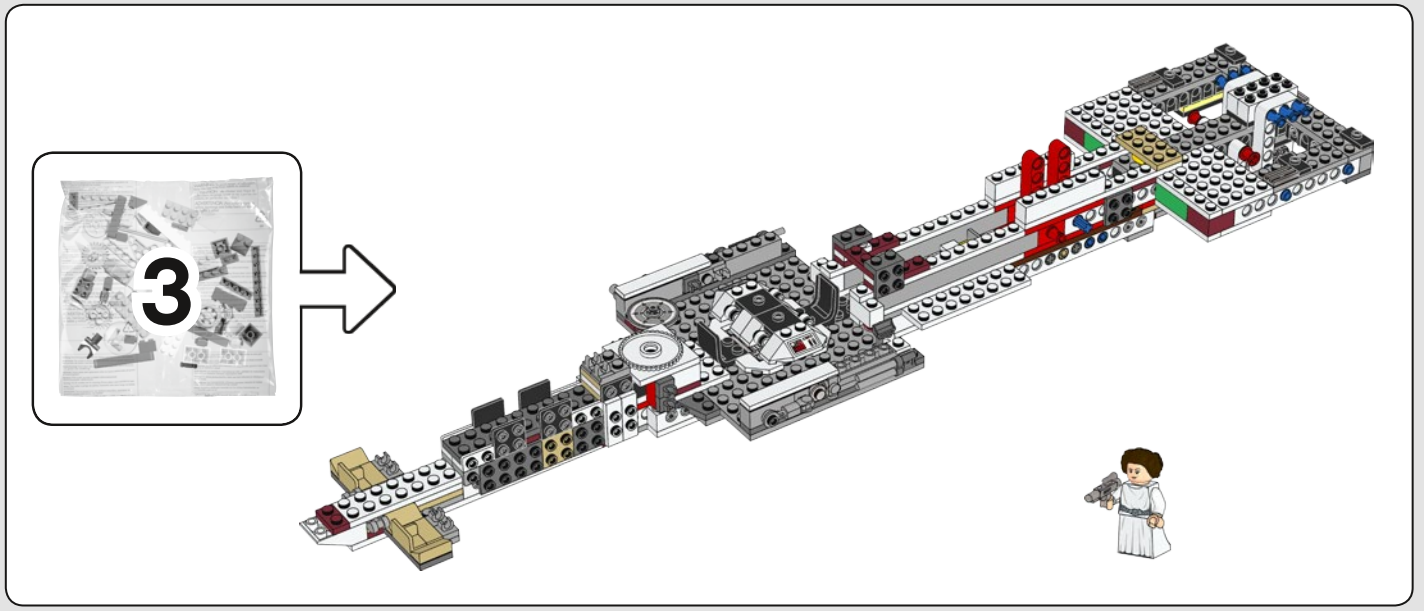
3

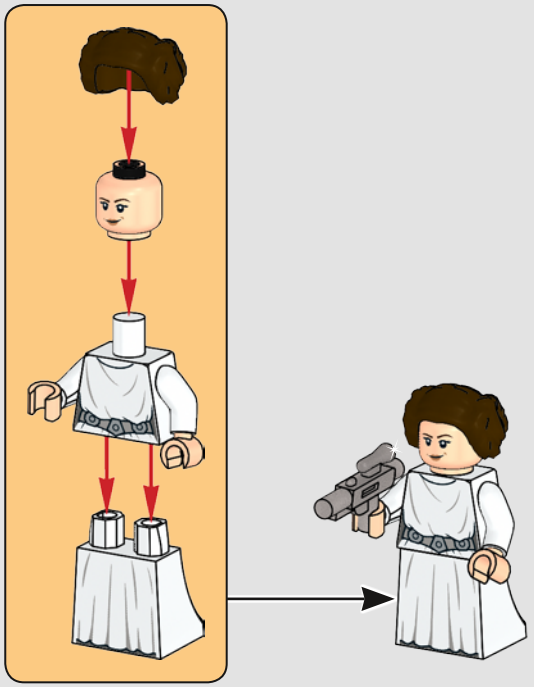

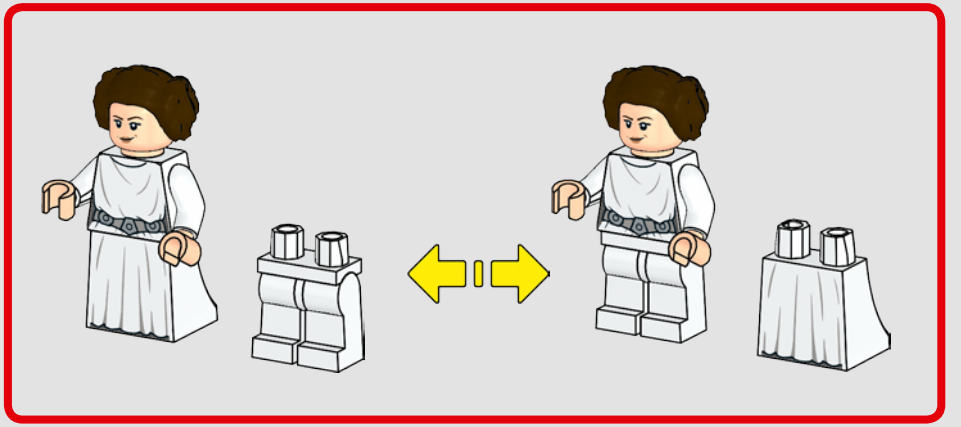

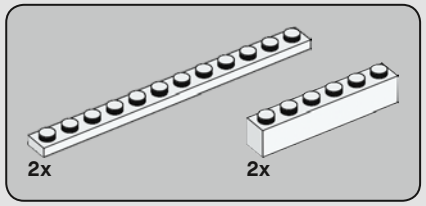

61

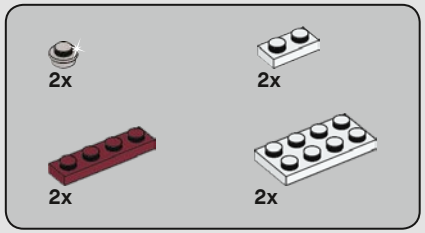

62

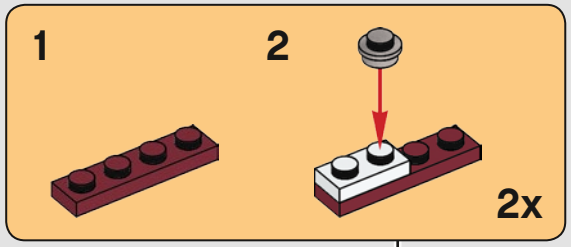

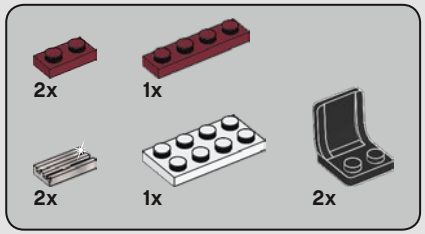

63

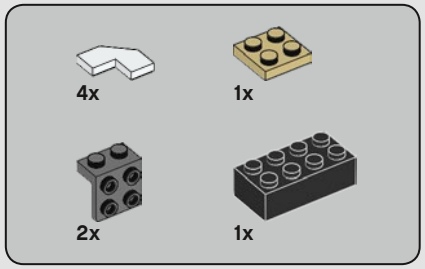

64

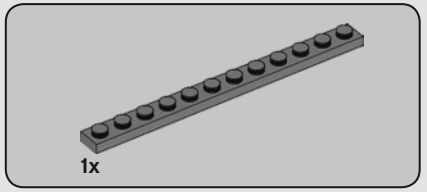

65

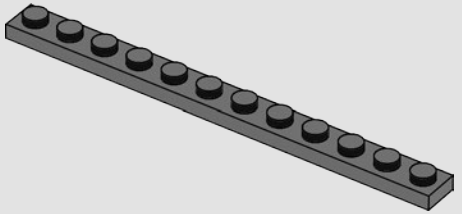

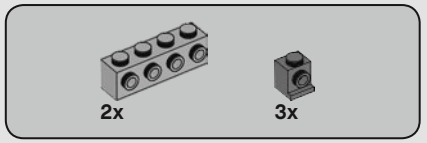

66

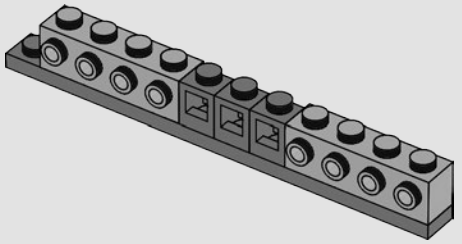

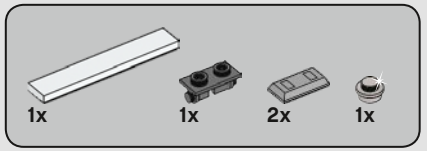

67

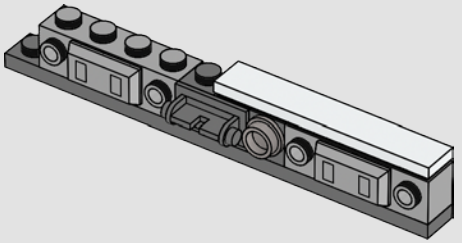

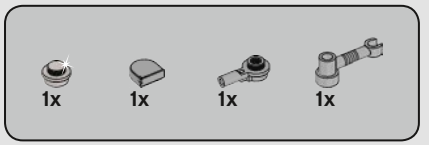

68

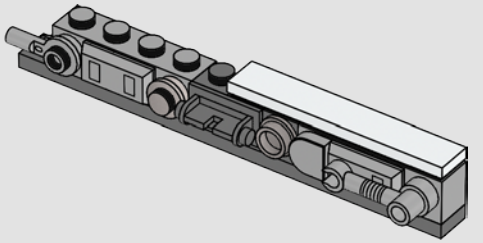

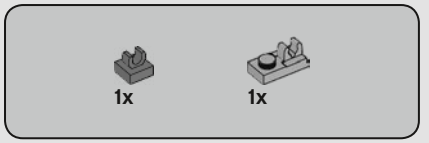

69

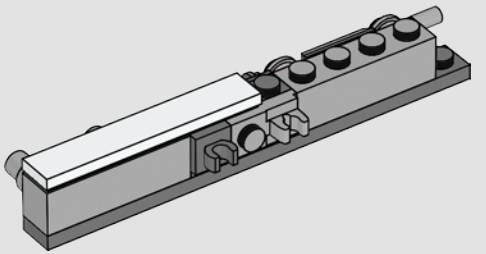

70

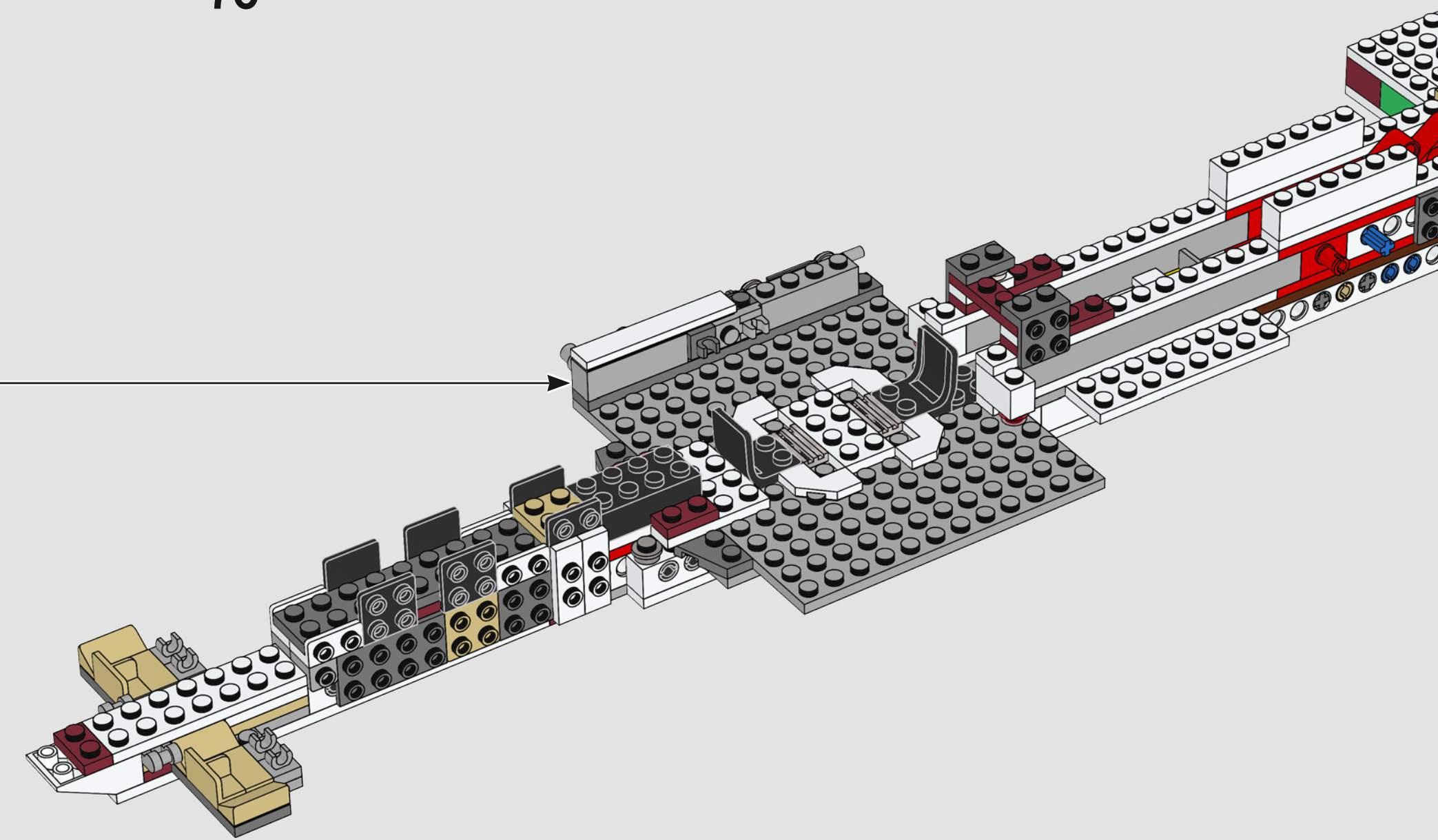

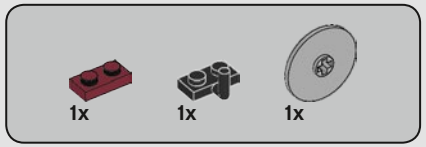

71

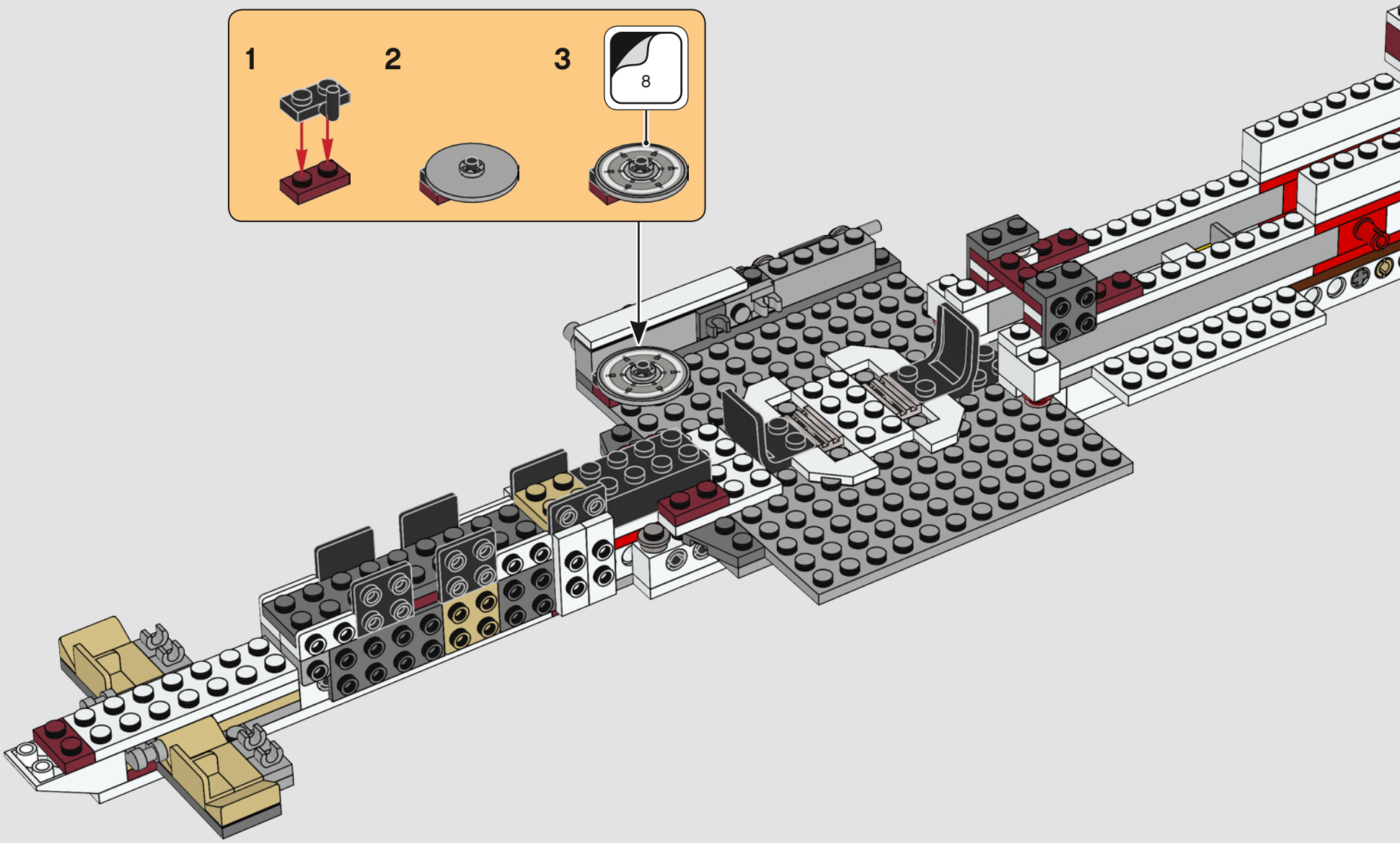

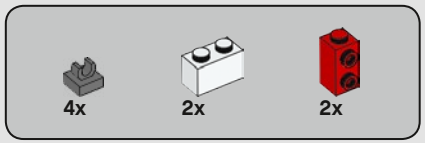

72

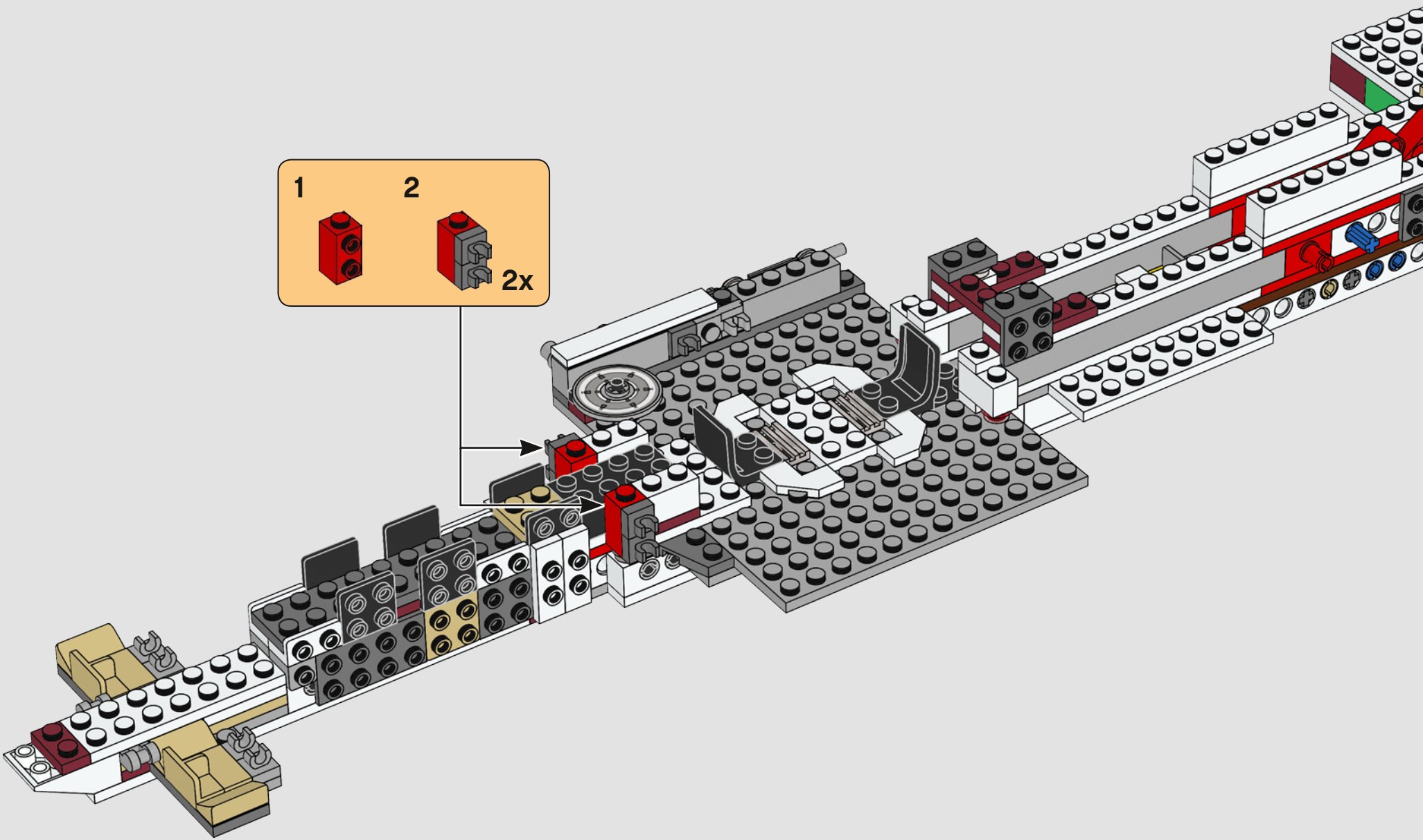

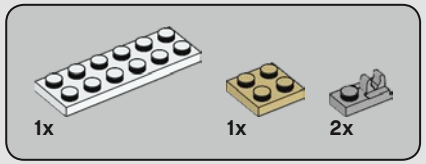

73

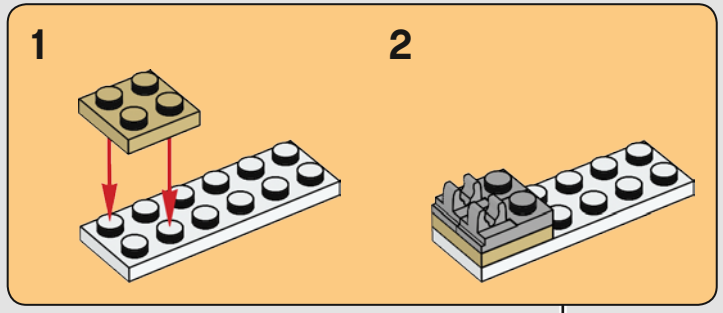

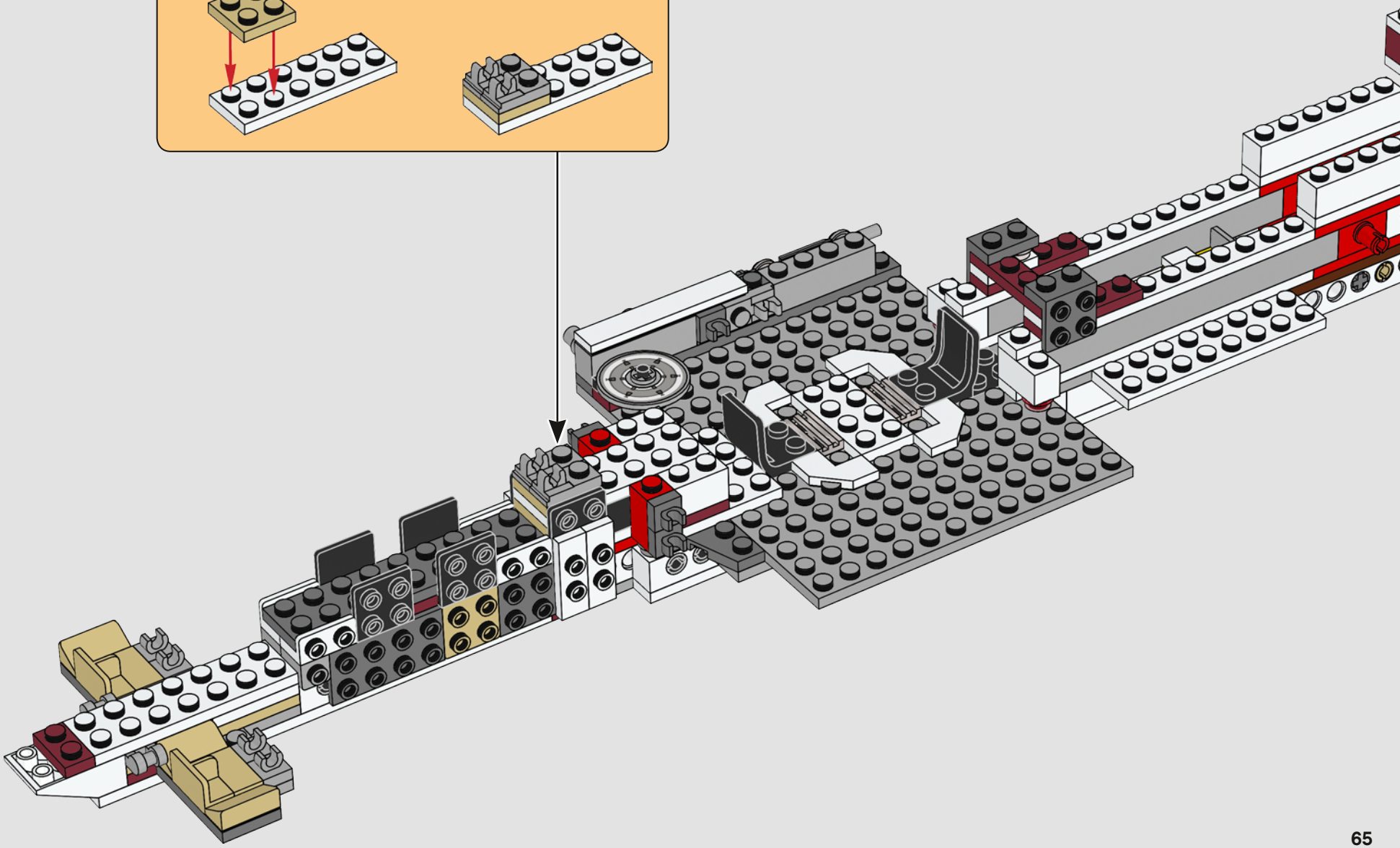

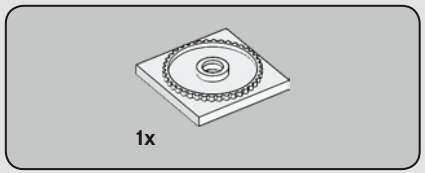

74

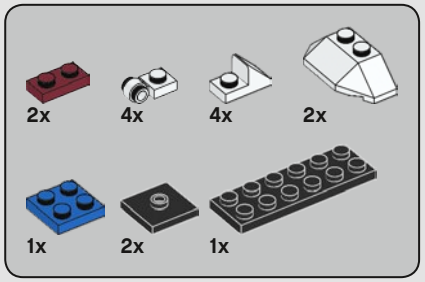

75

1

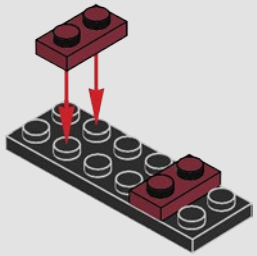

2

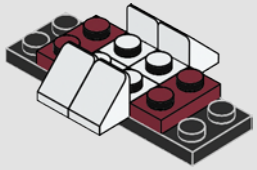

3

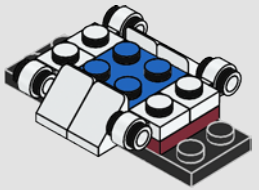

4

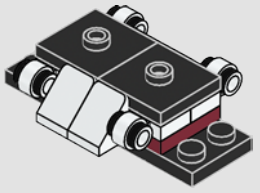

5

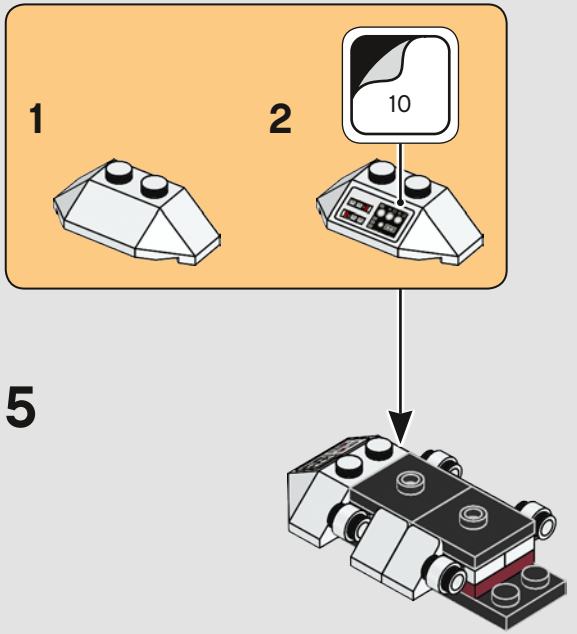

6

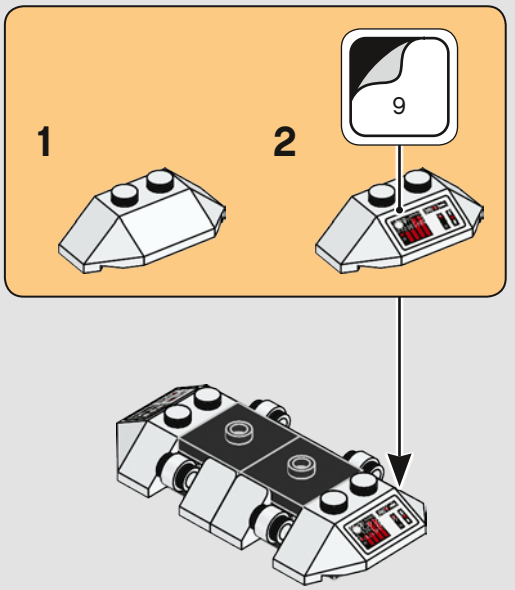

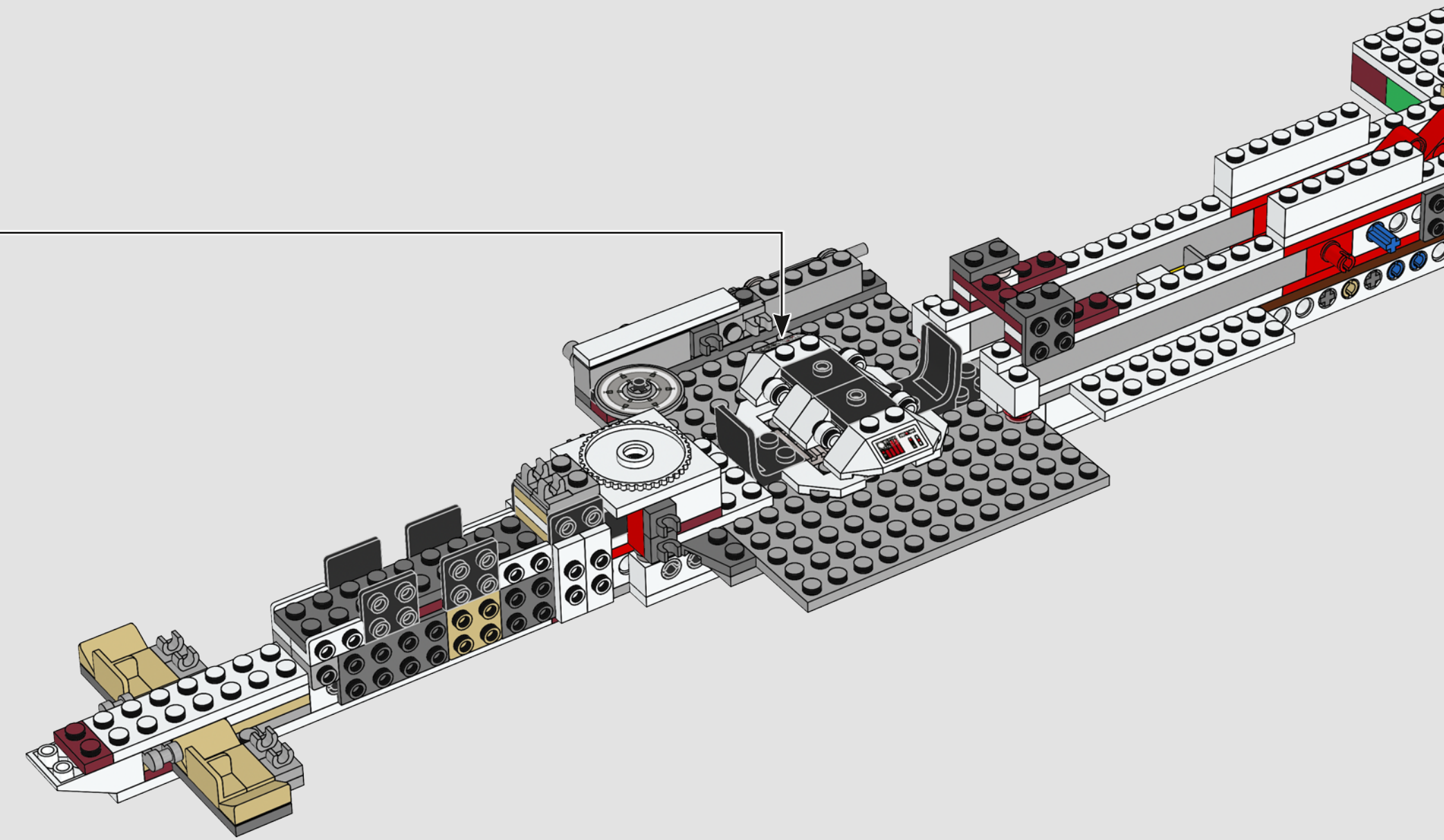

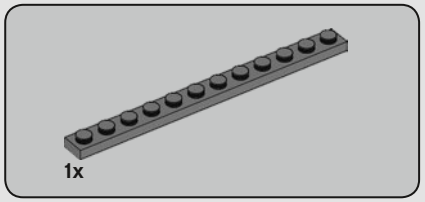

76

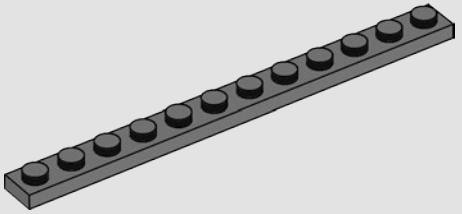

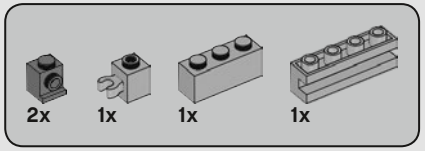

77

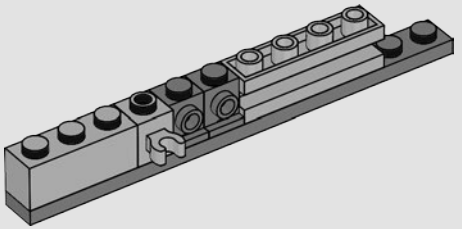

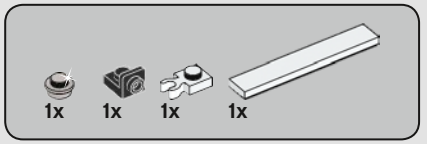

78

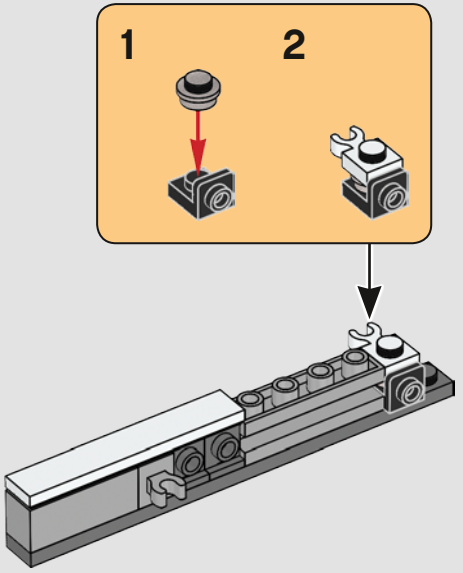

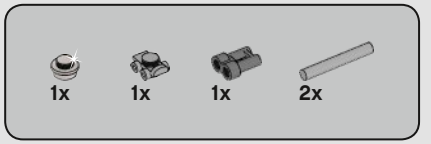

79

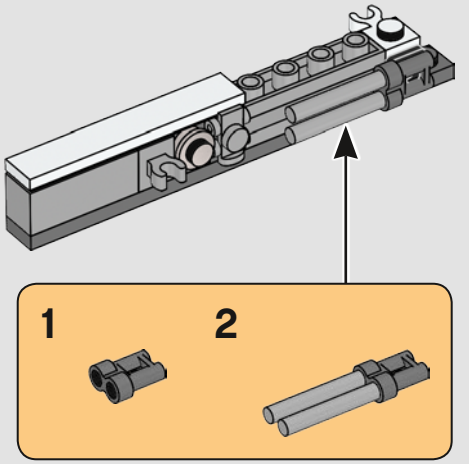

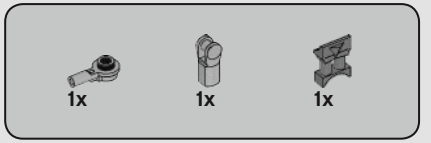

80

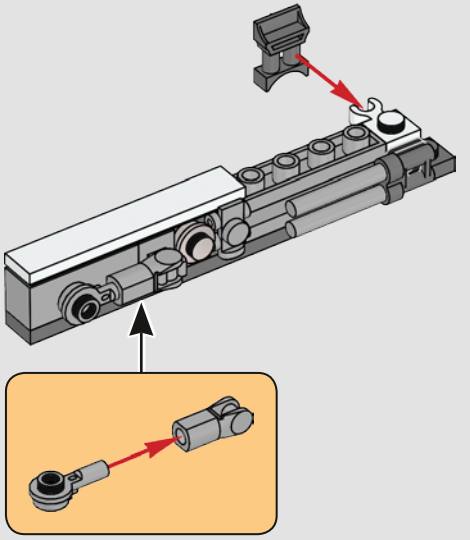

81

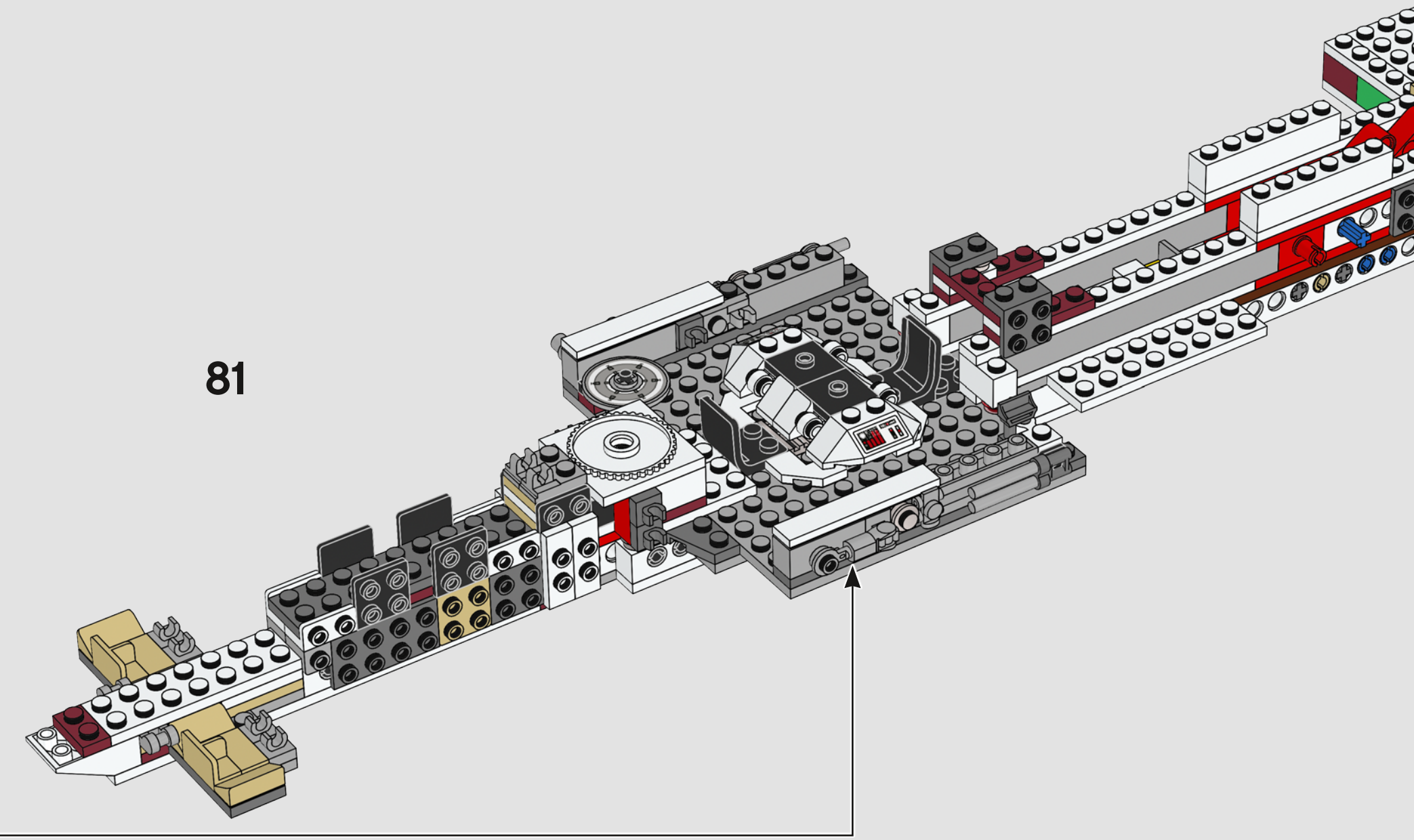

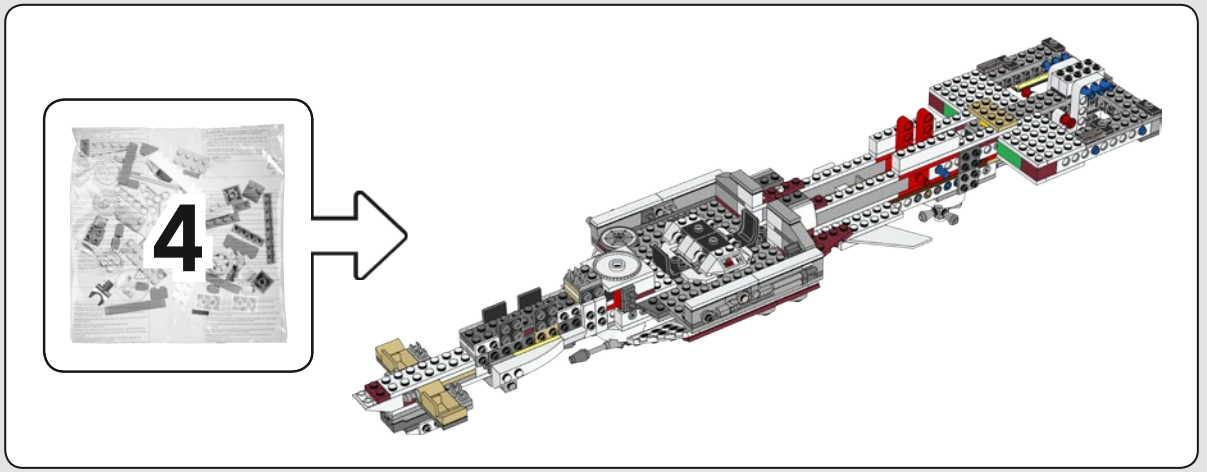

82

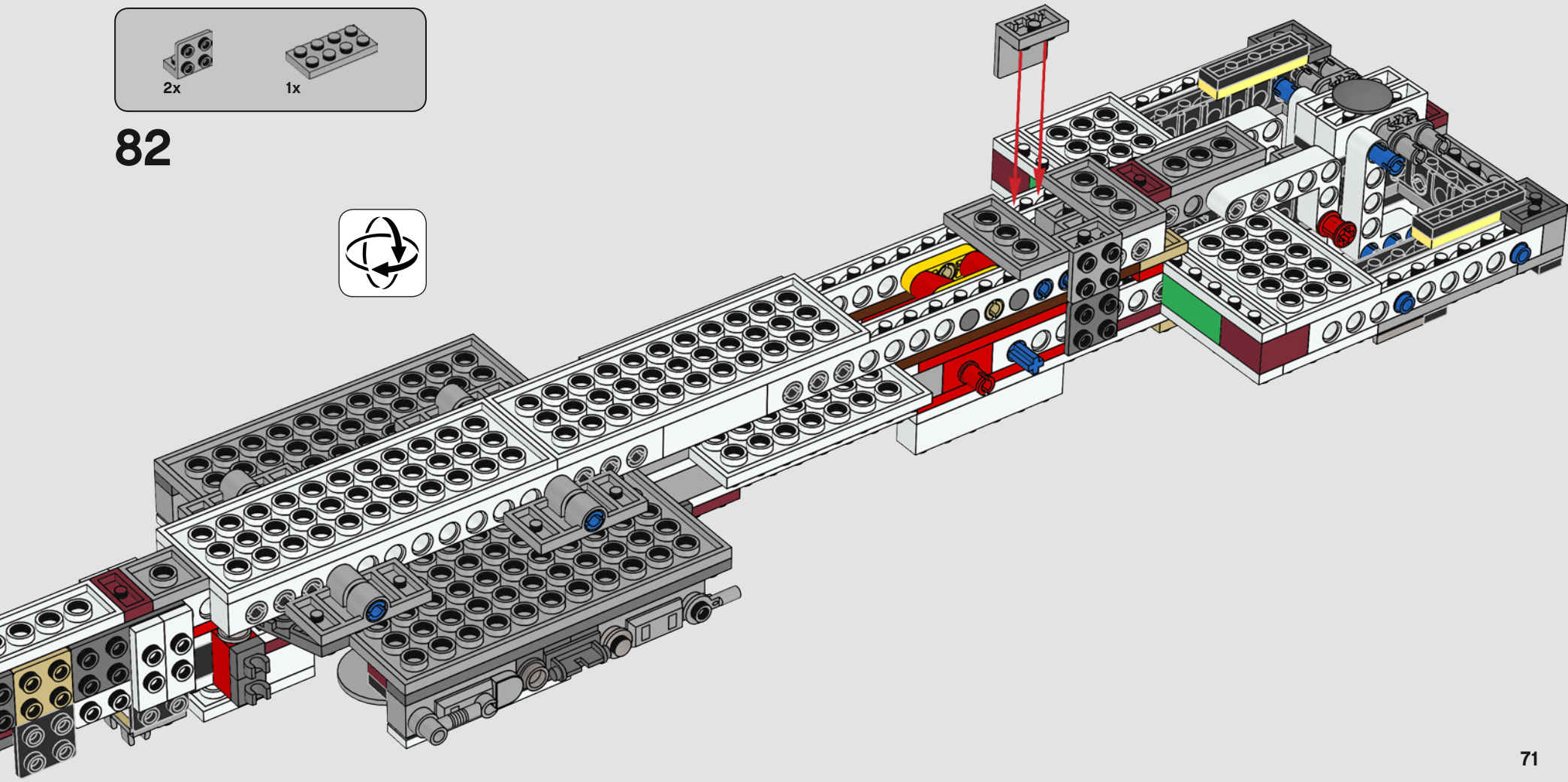

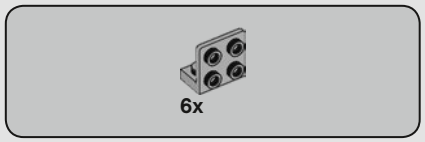

83

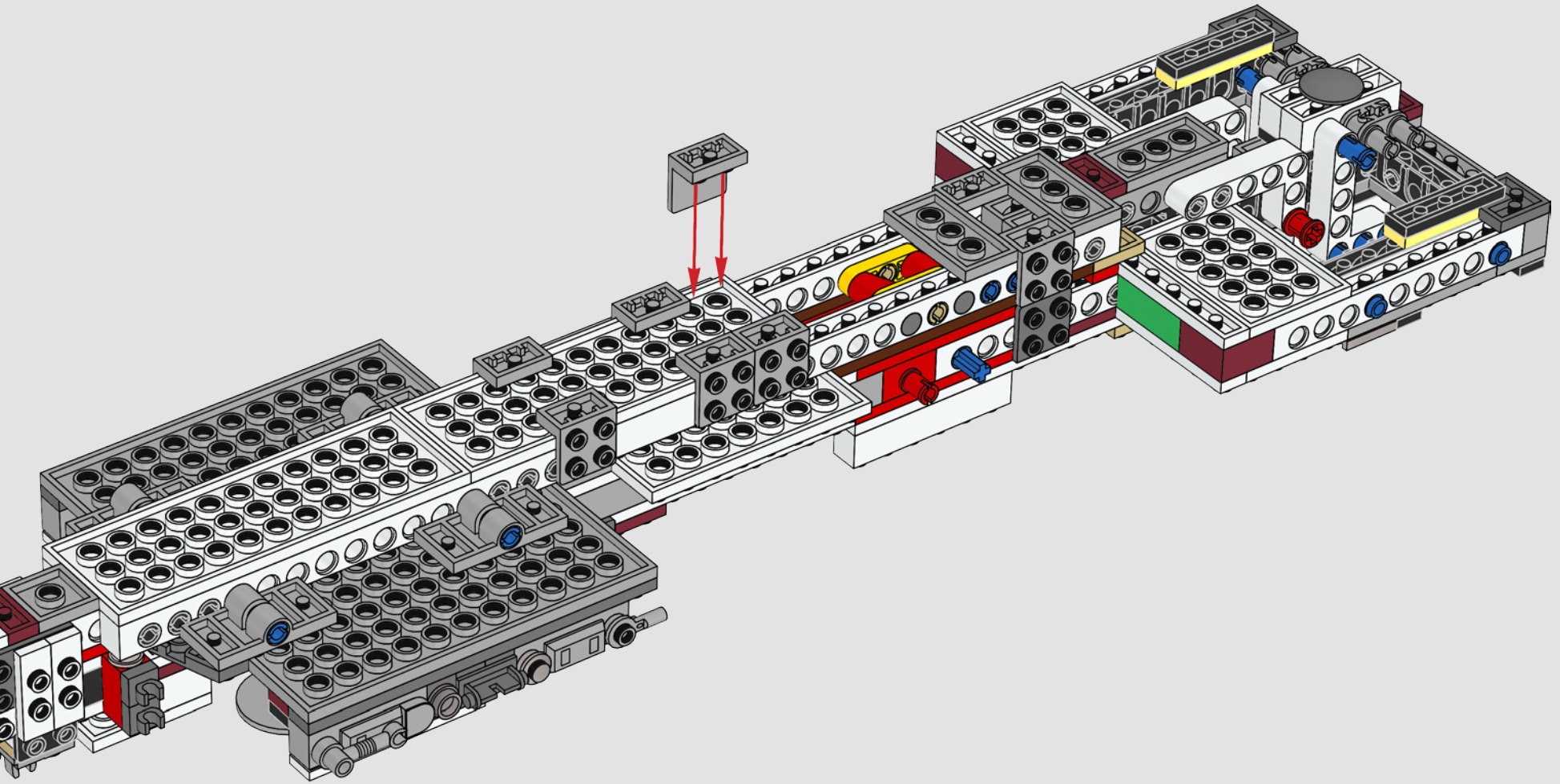

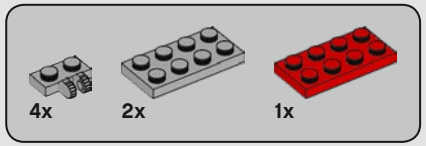

84

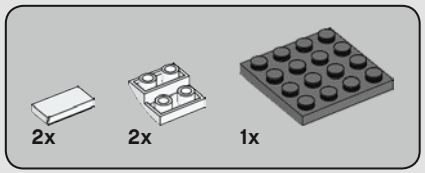

85

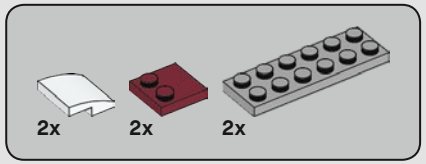

86

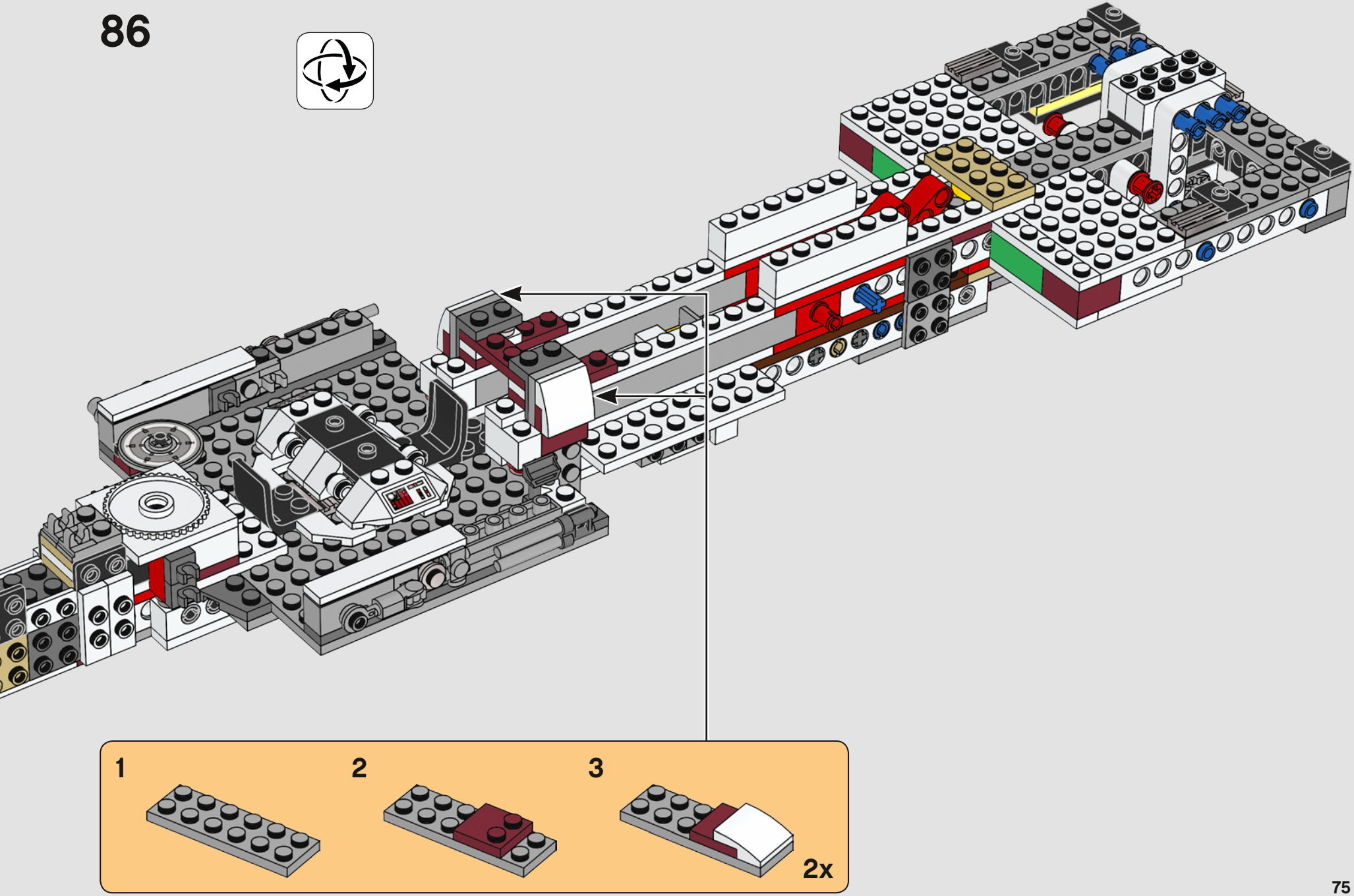

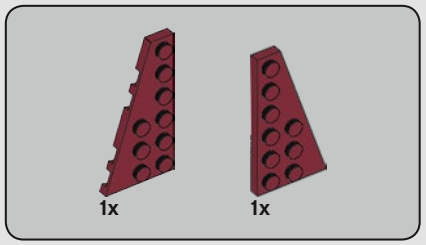

87

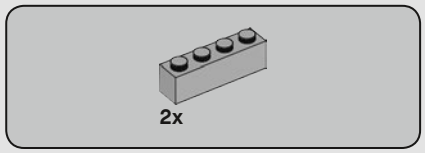

88

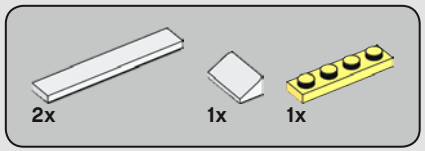

89

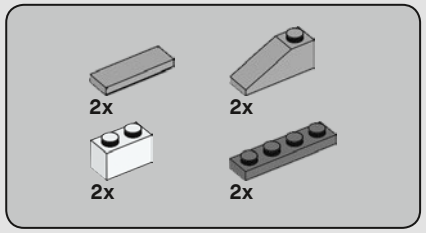

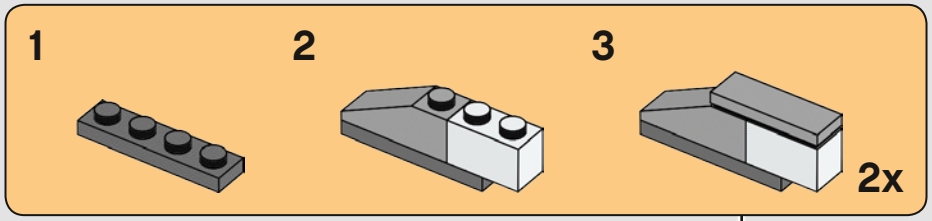

90

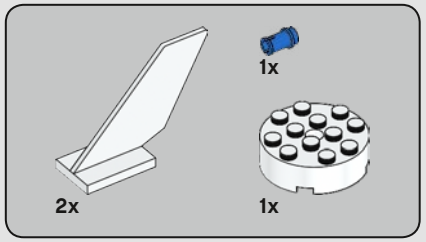

91

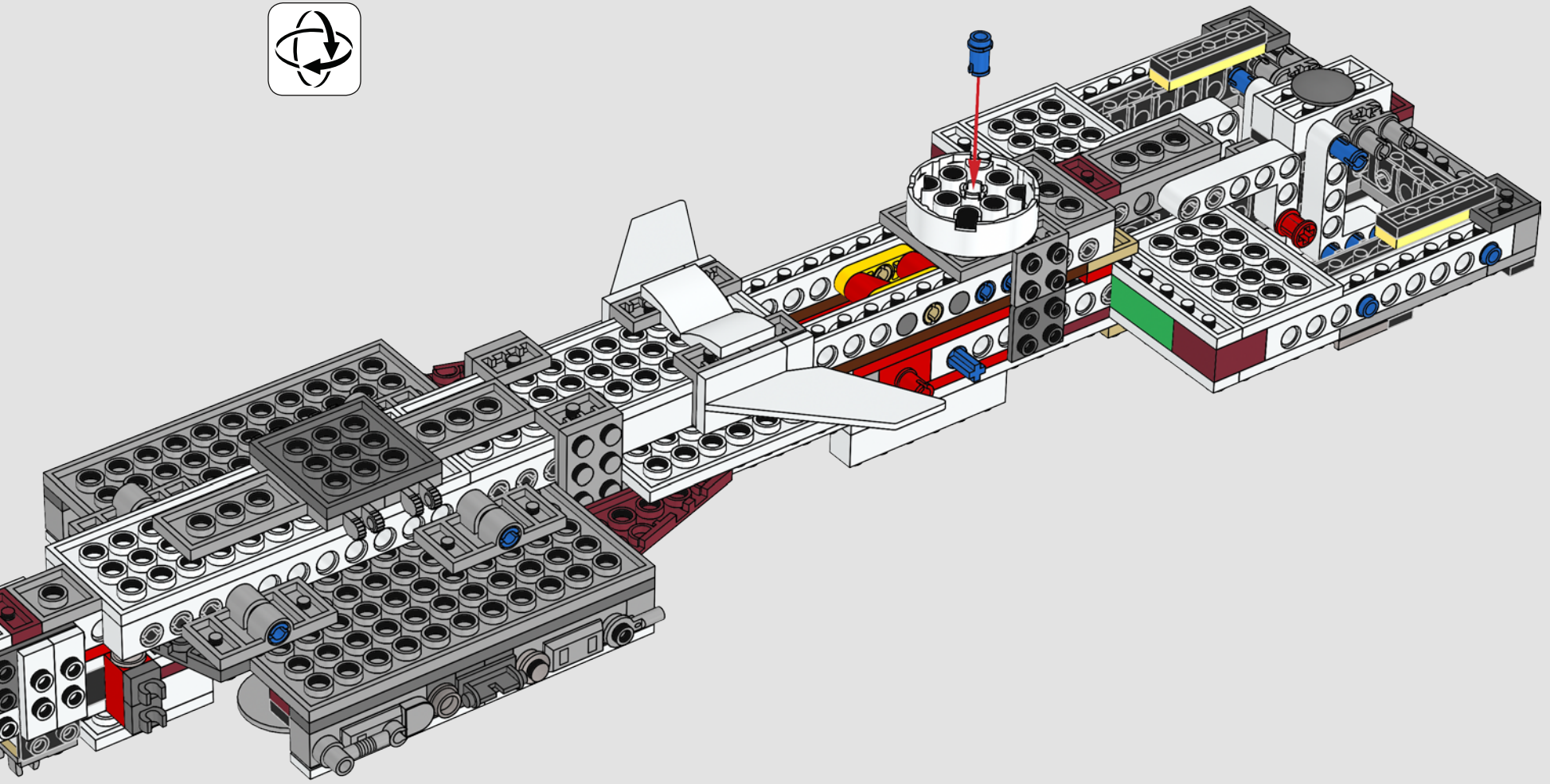

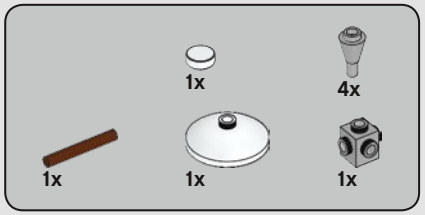

92

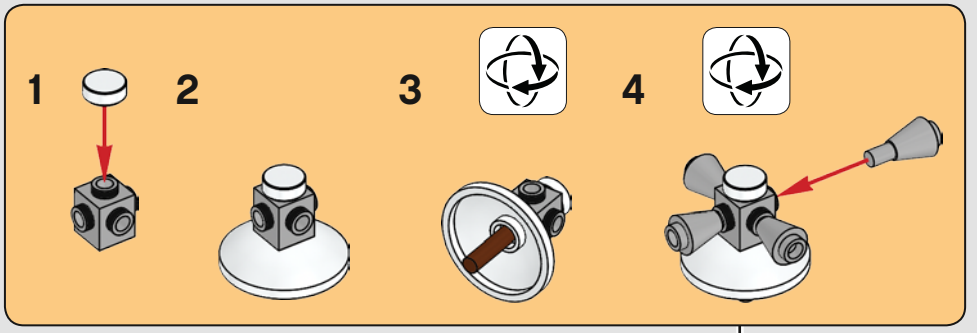

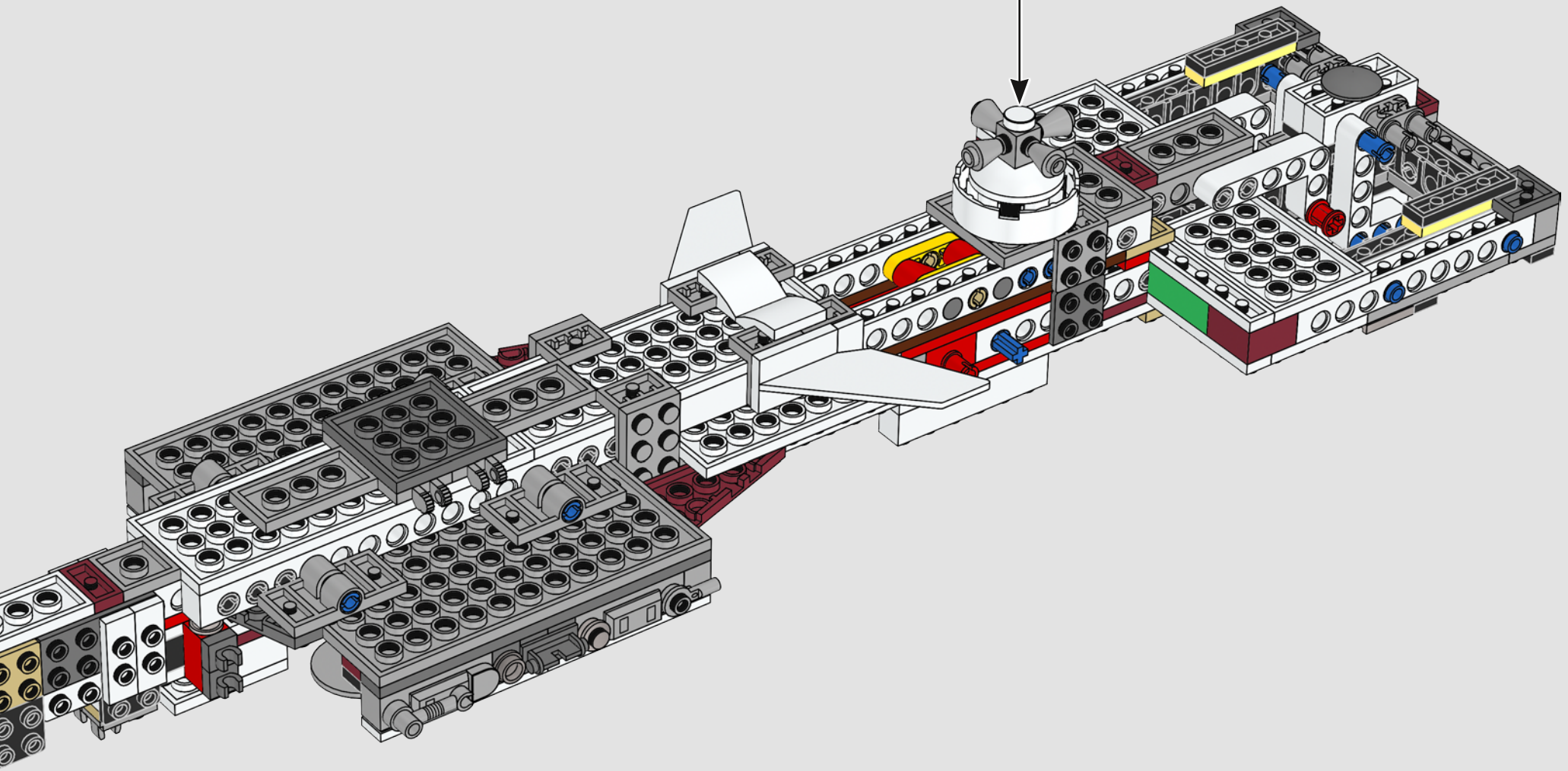

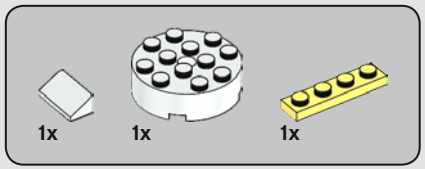

93

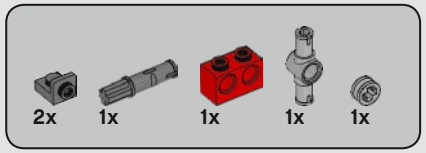

94

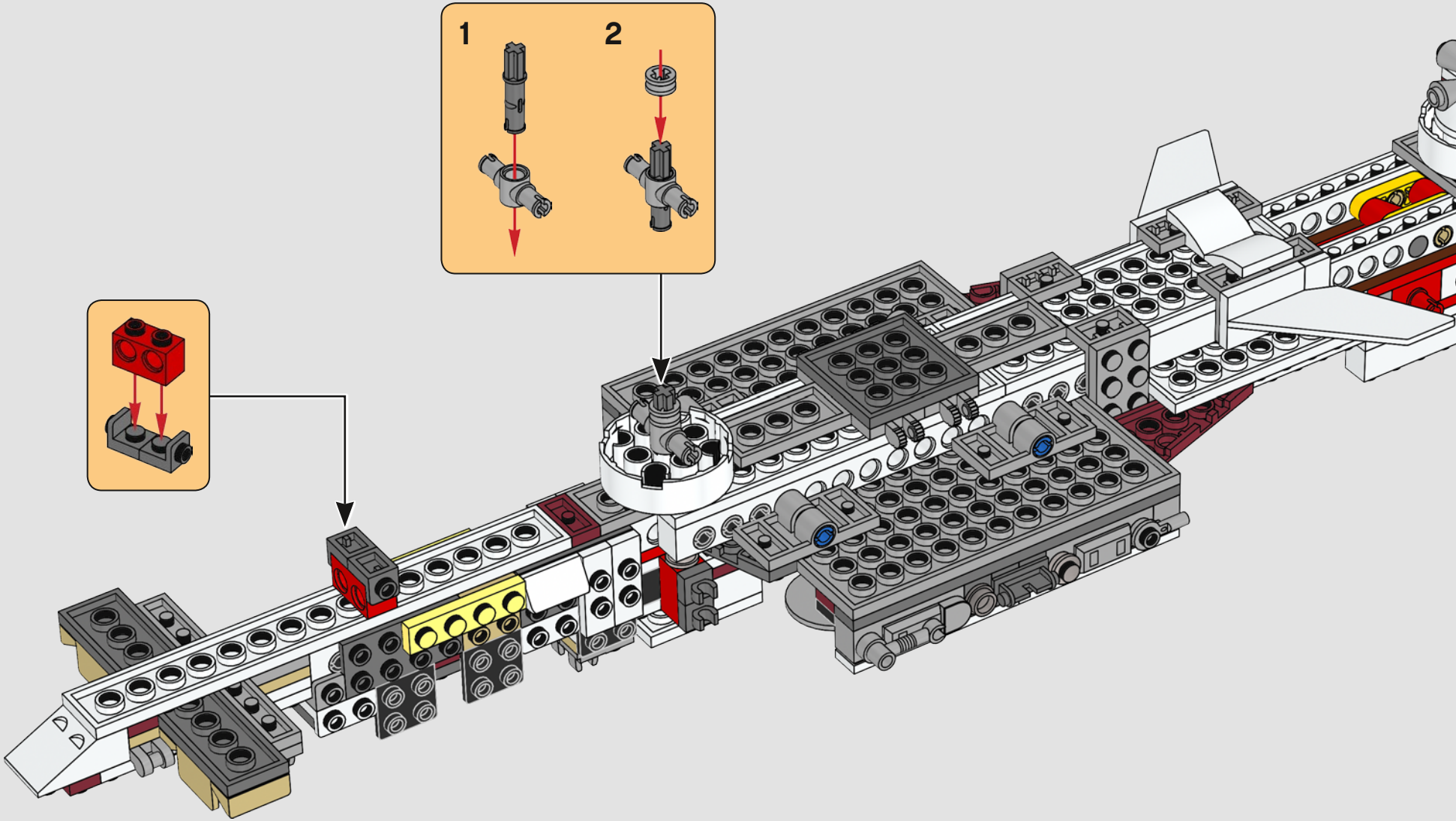

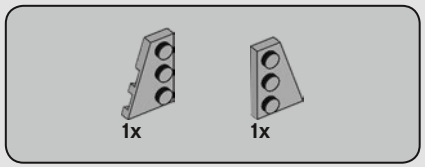

95

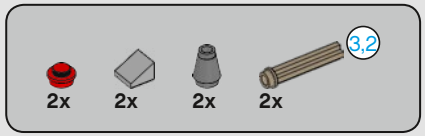

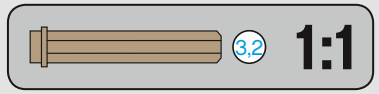

96

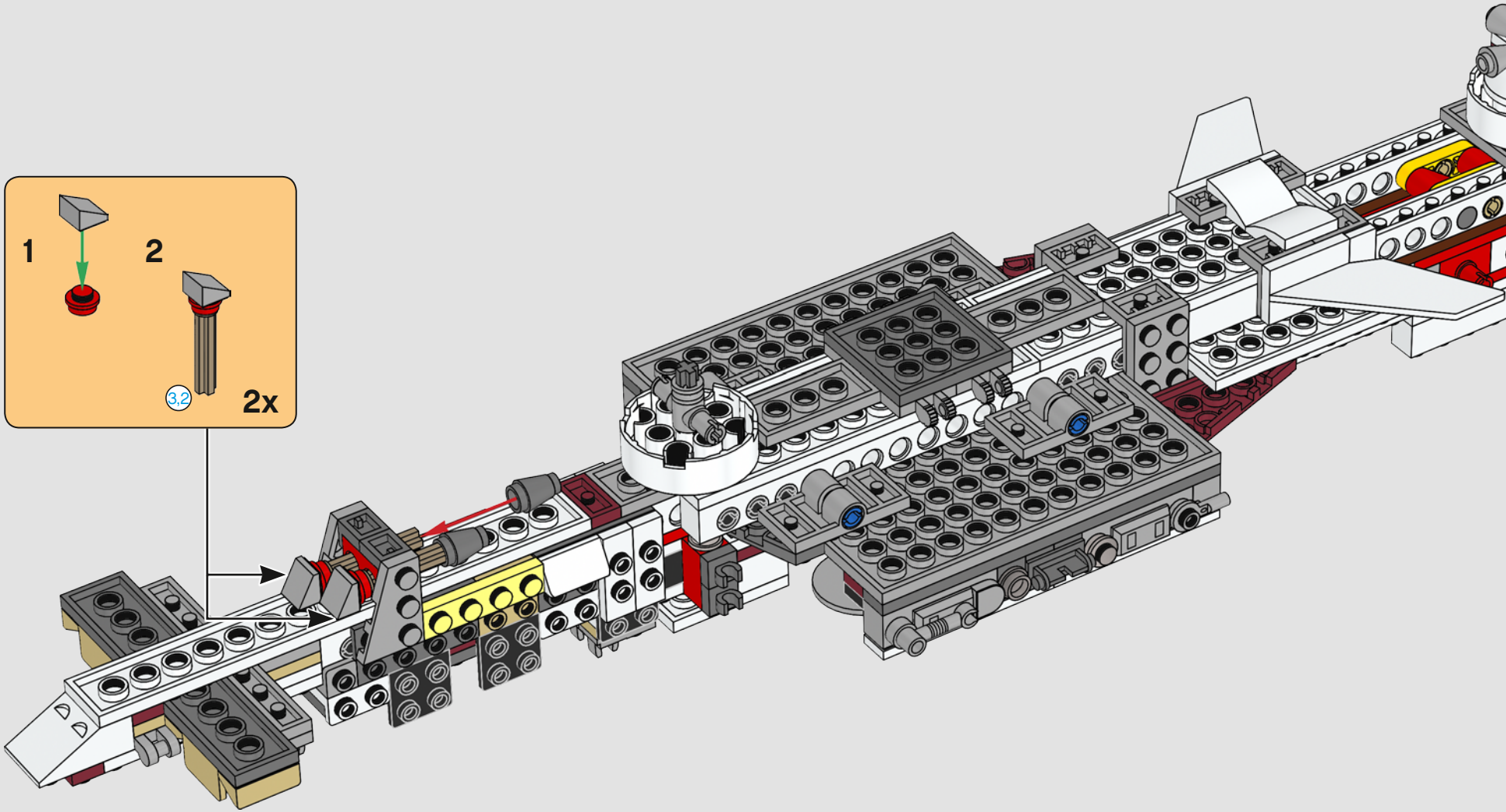

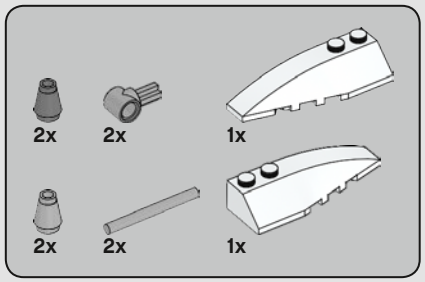

97

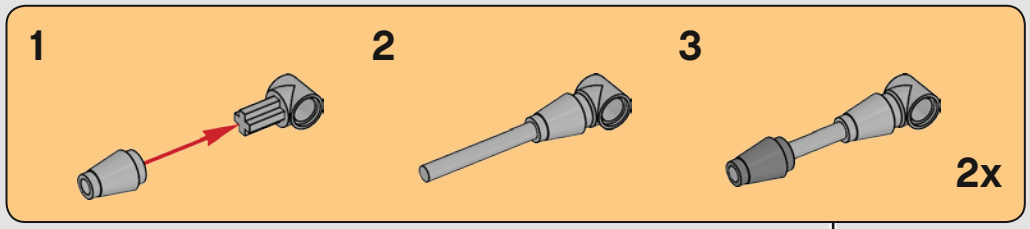

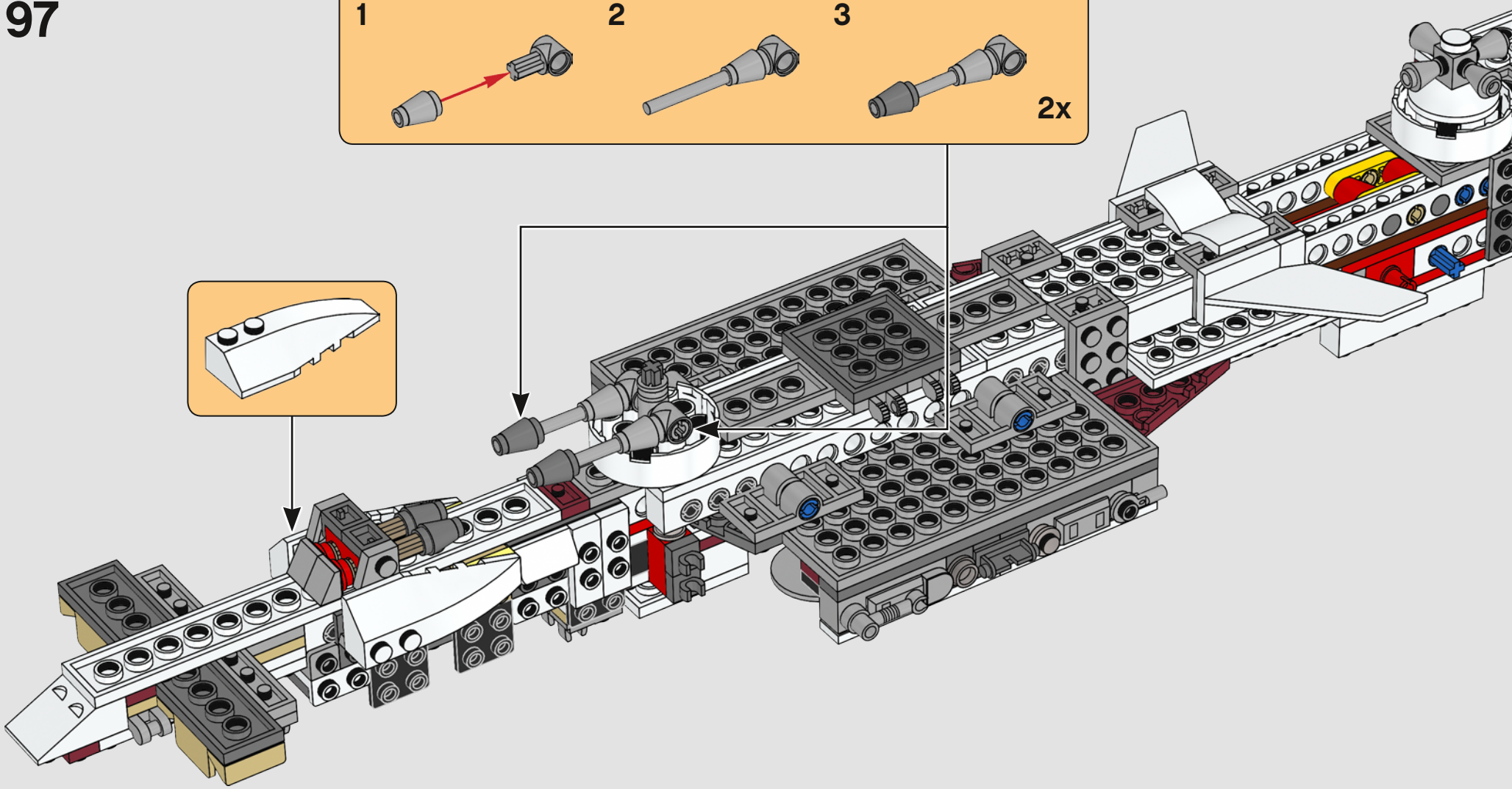

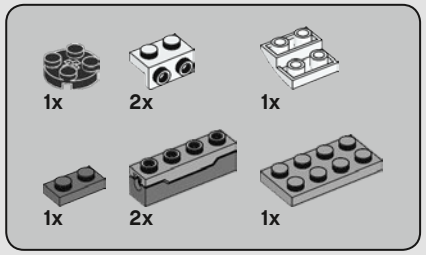

98

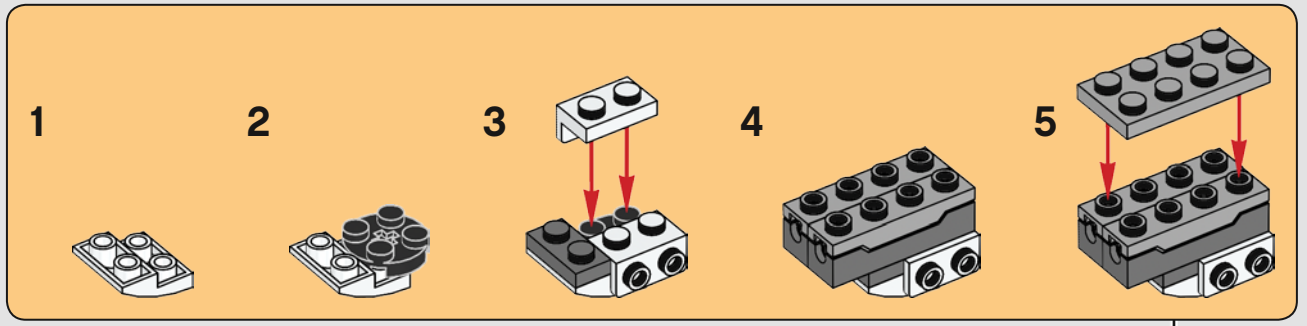

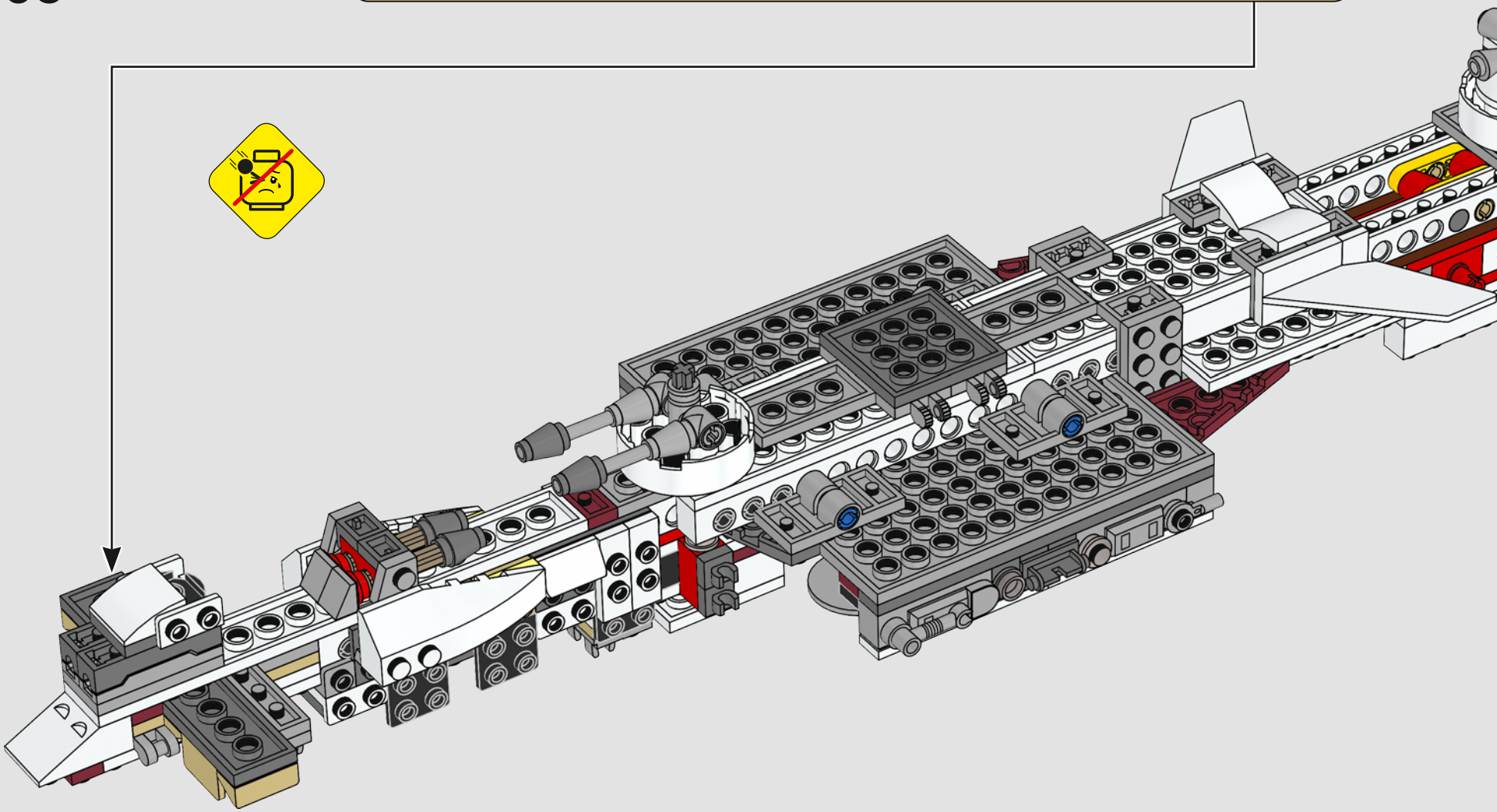

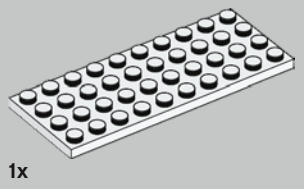

99

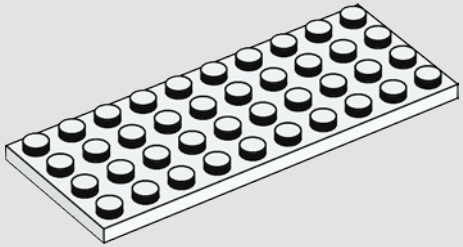

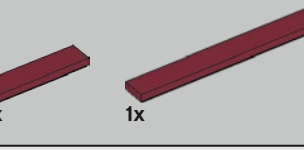

100

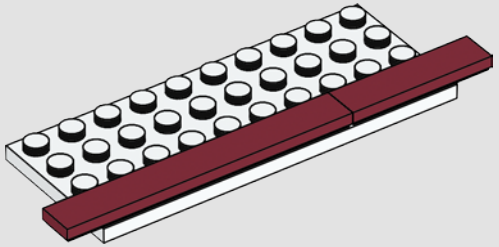

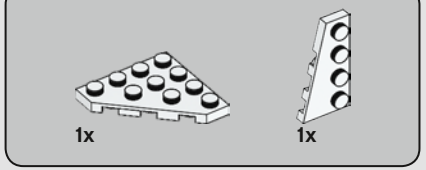

101

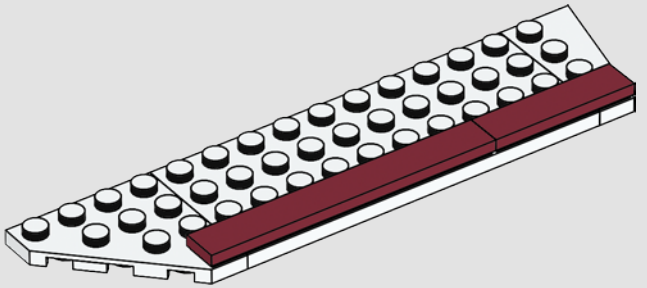

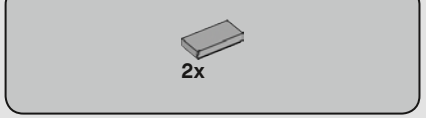

102

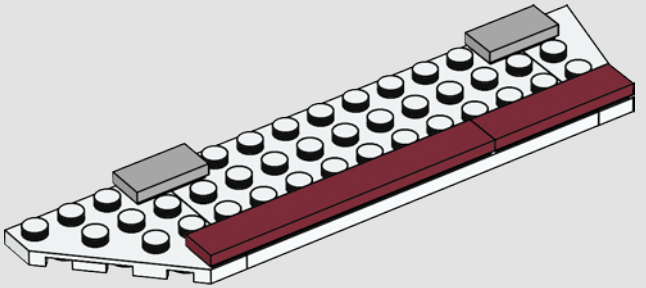

103

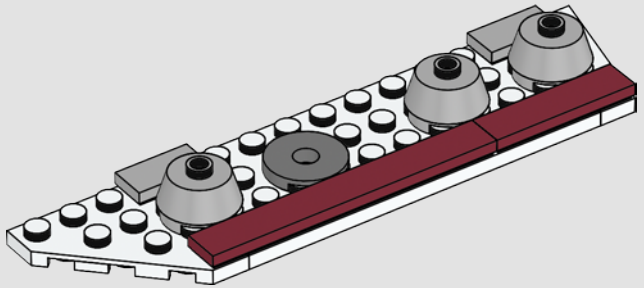

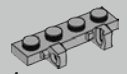

104

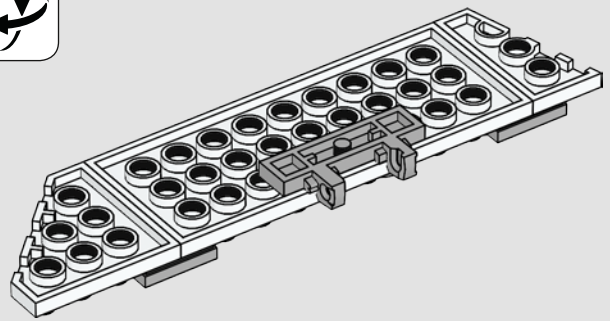

105

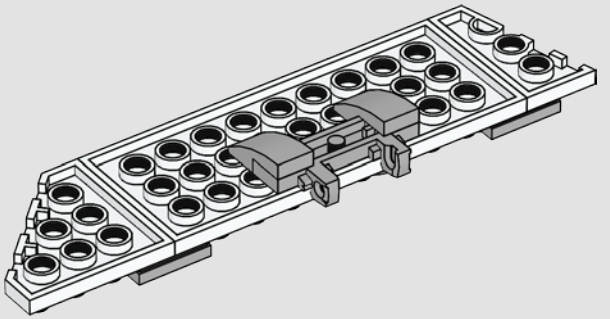

106

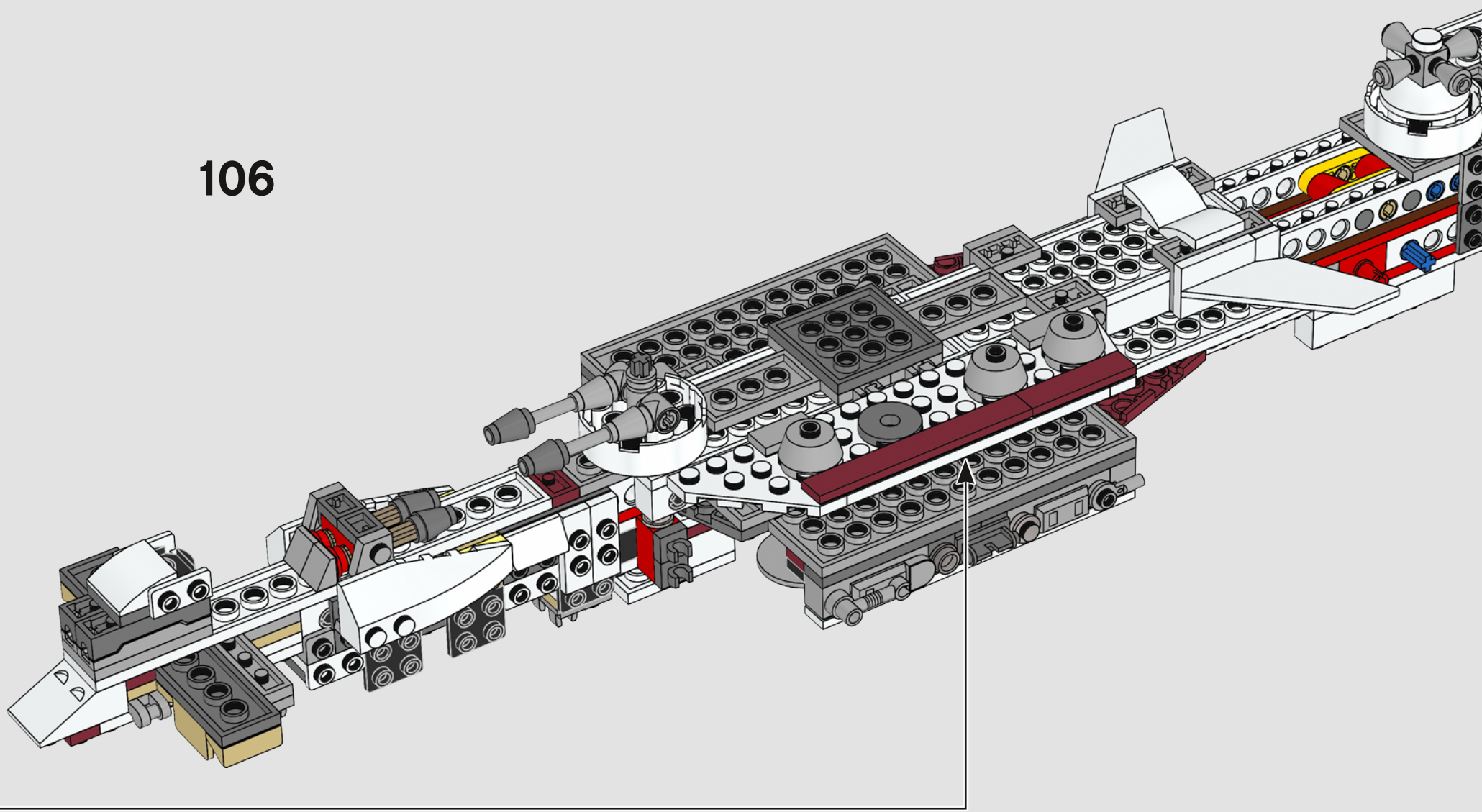

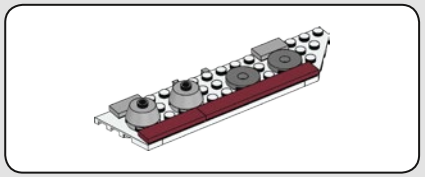

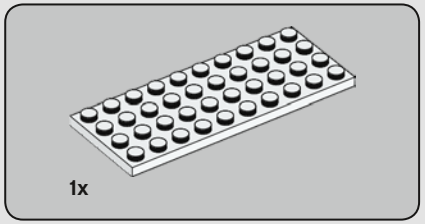

107

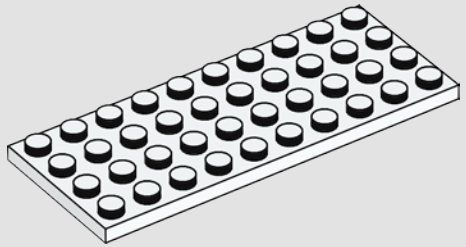

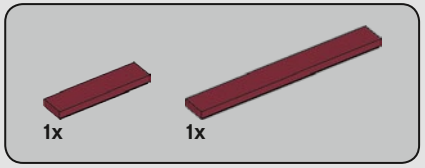

108

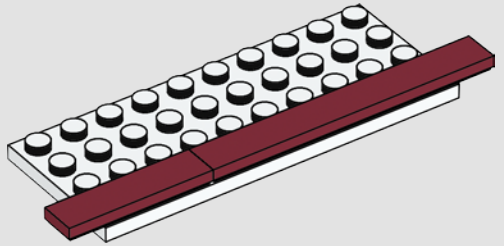

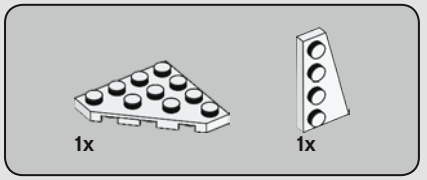

109

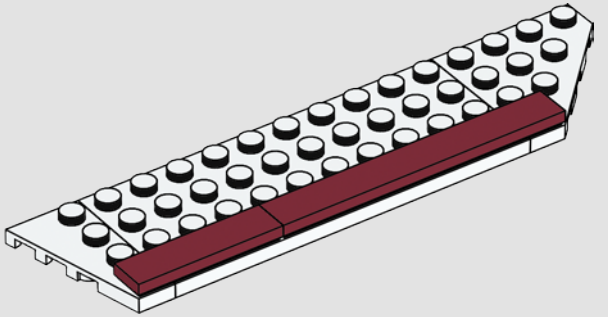

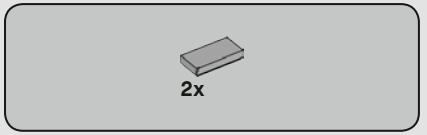

110

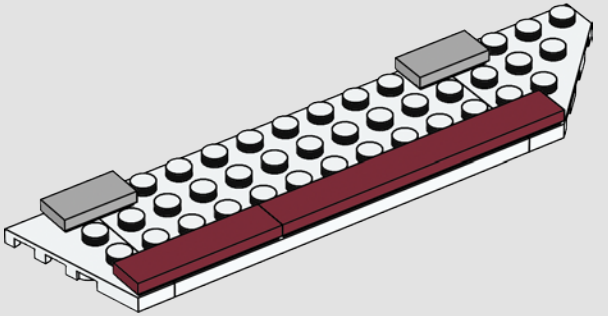

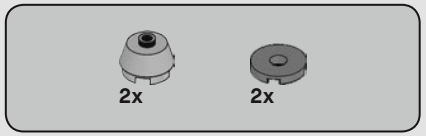

111

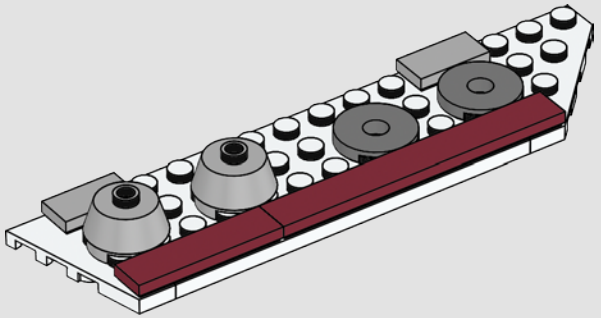

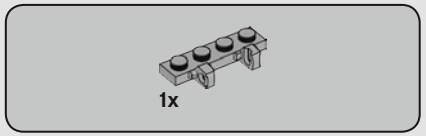

112

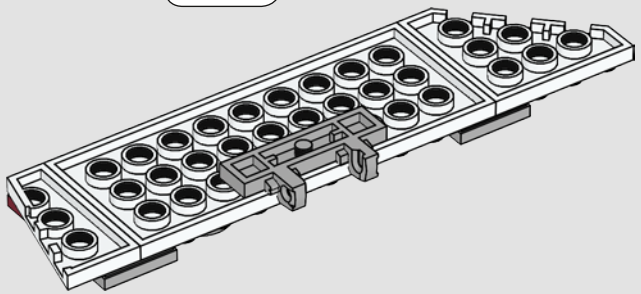

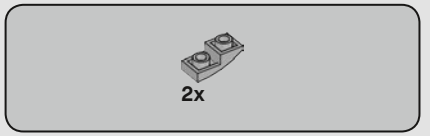

113

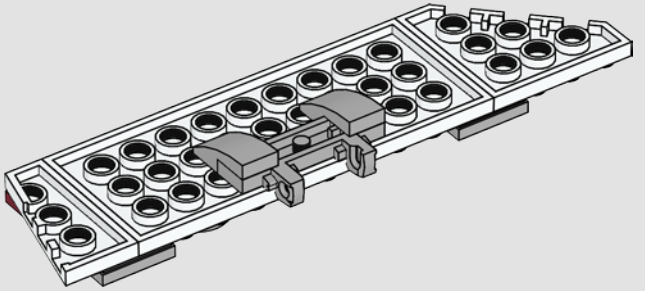

114

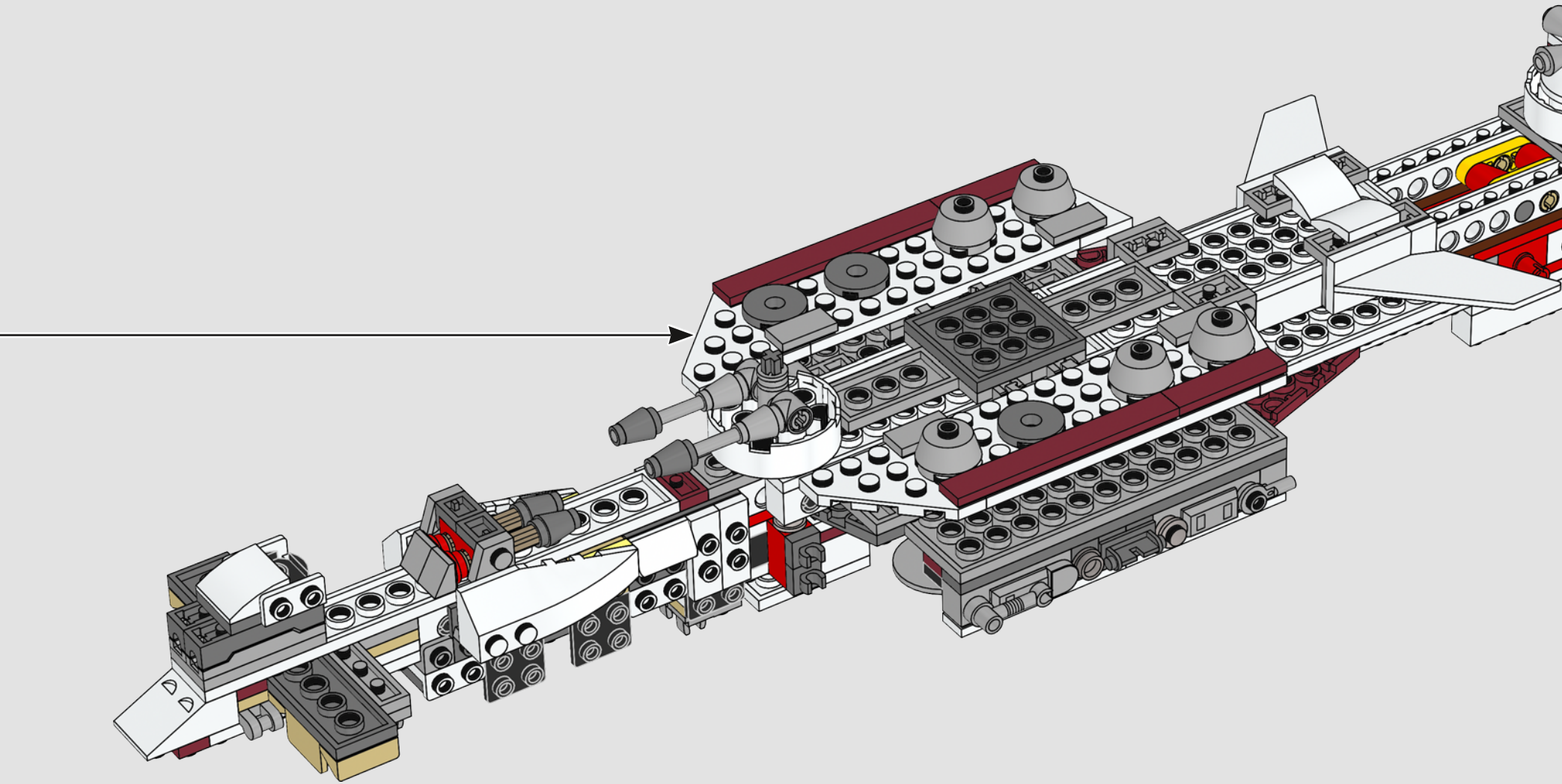

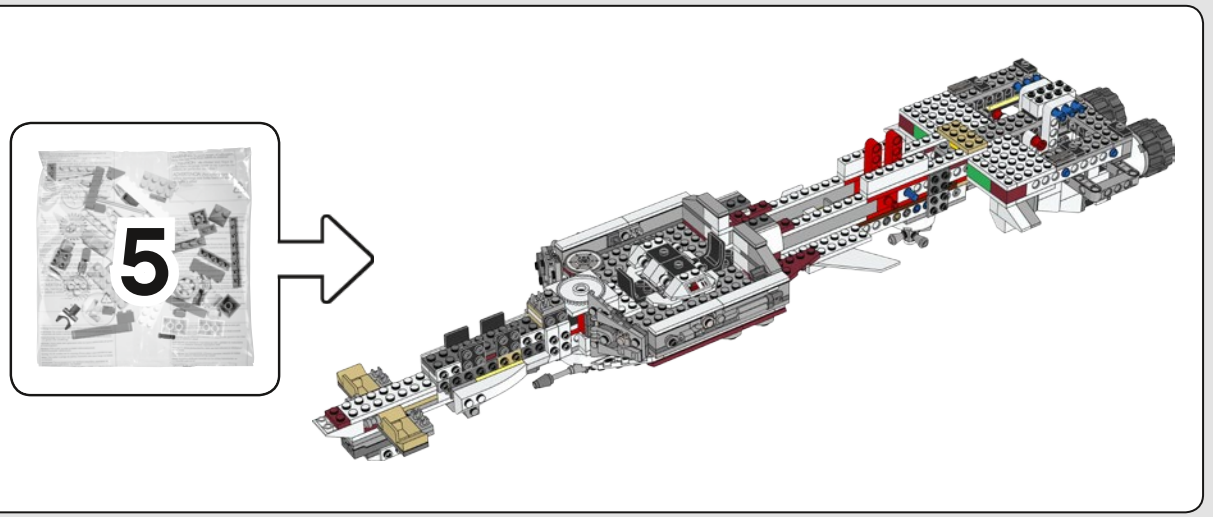

1x 1x

118

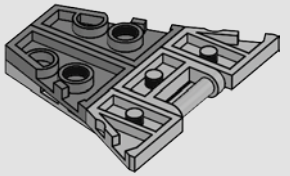

1x 1x

115

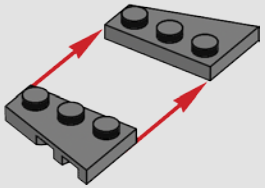

1x

116

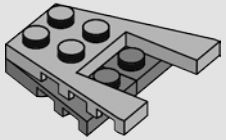

1x 1x

117

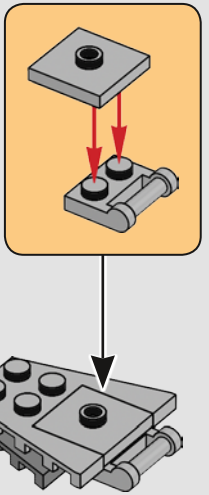

2x

119

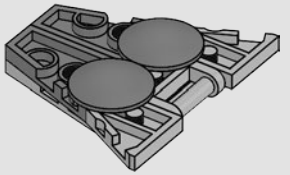

1x 1x

120

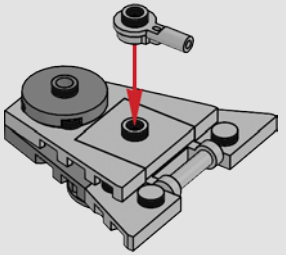

121

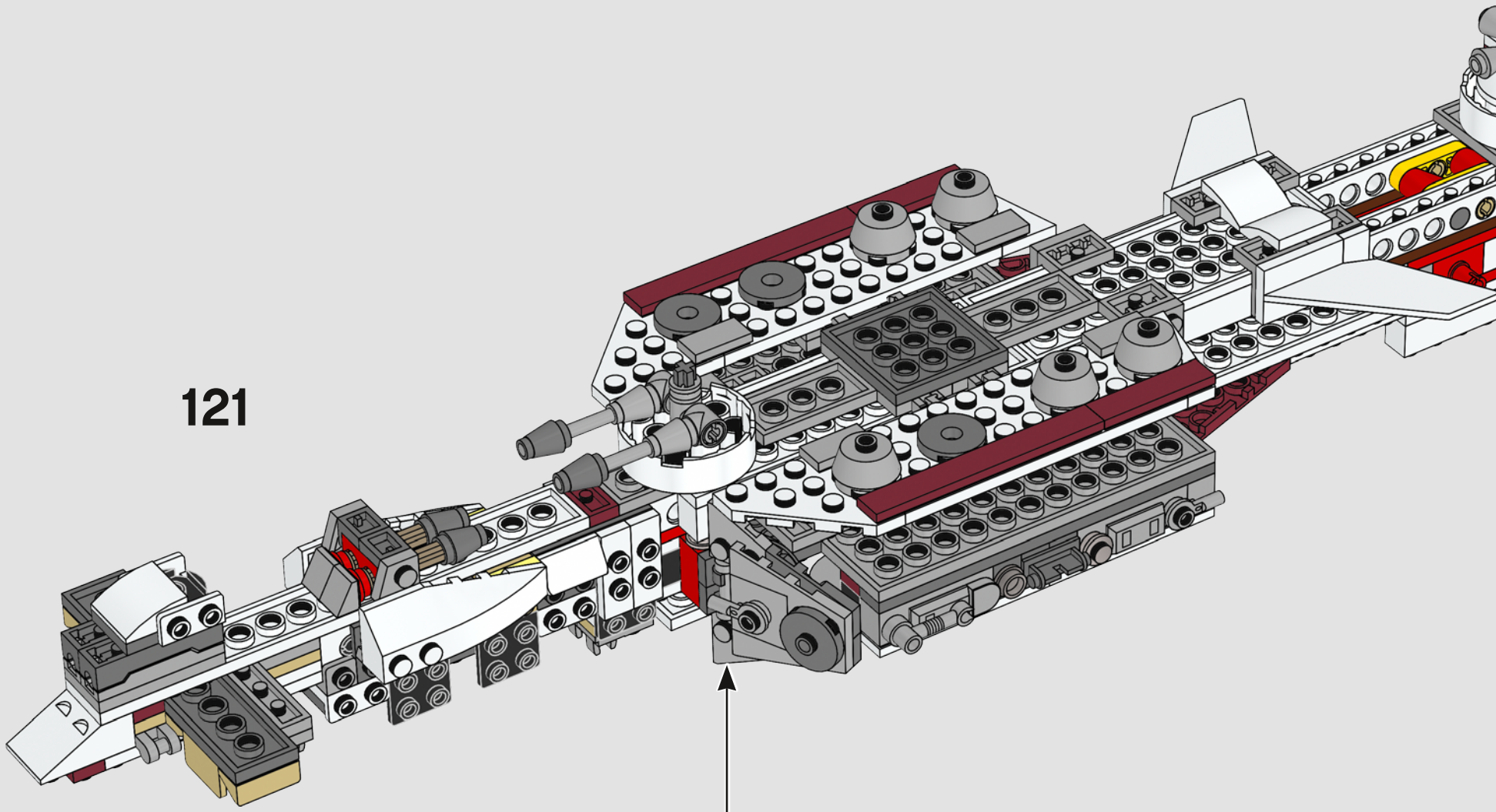

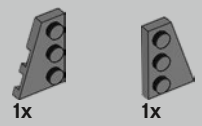

122

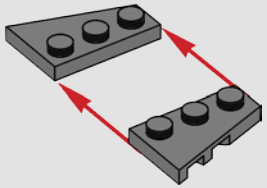

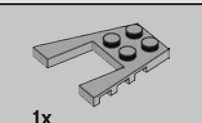

123

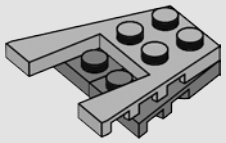

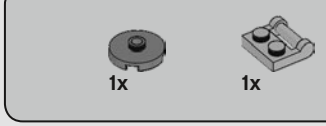

124

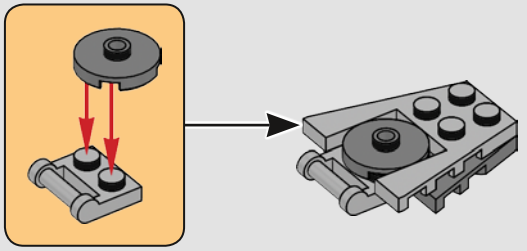

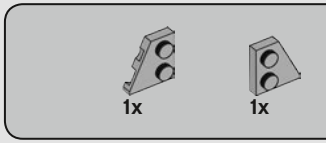

125

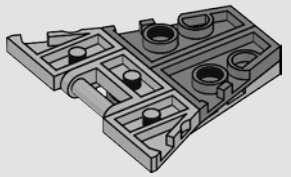

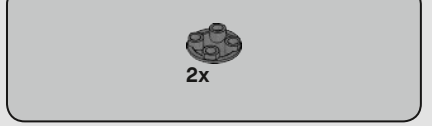

126

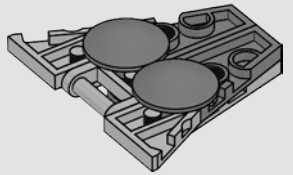

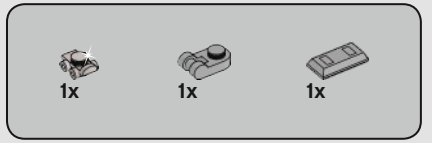

127

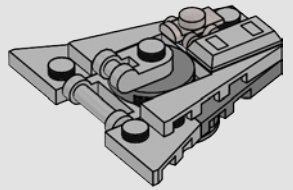

128

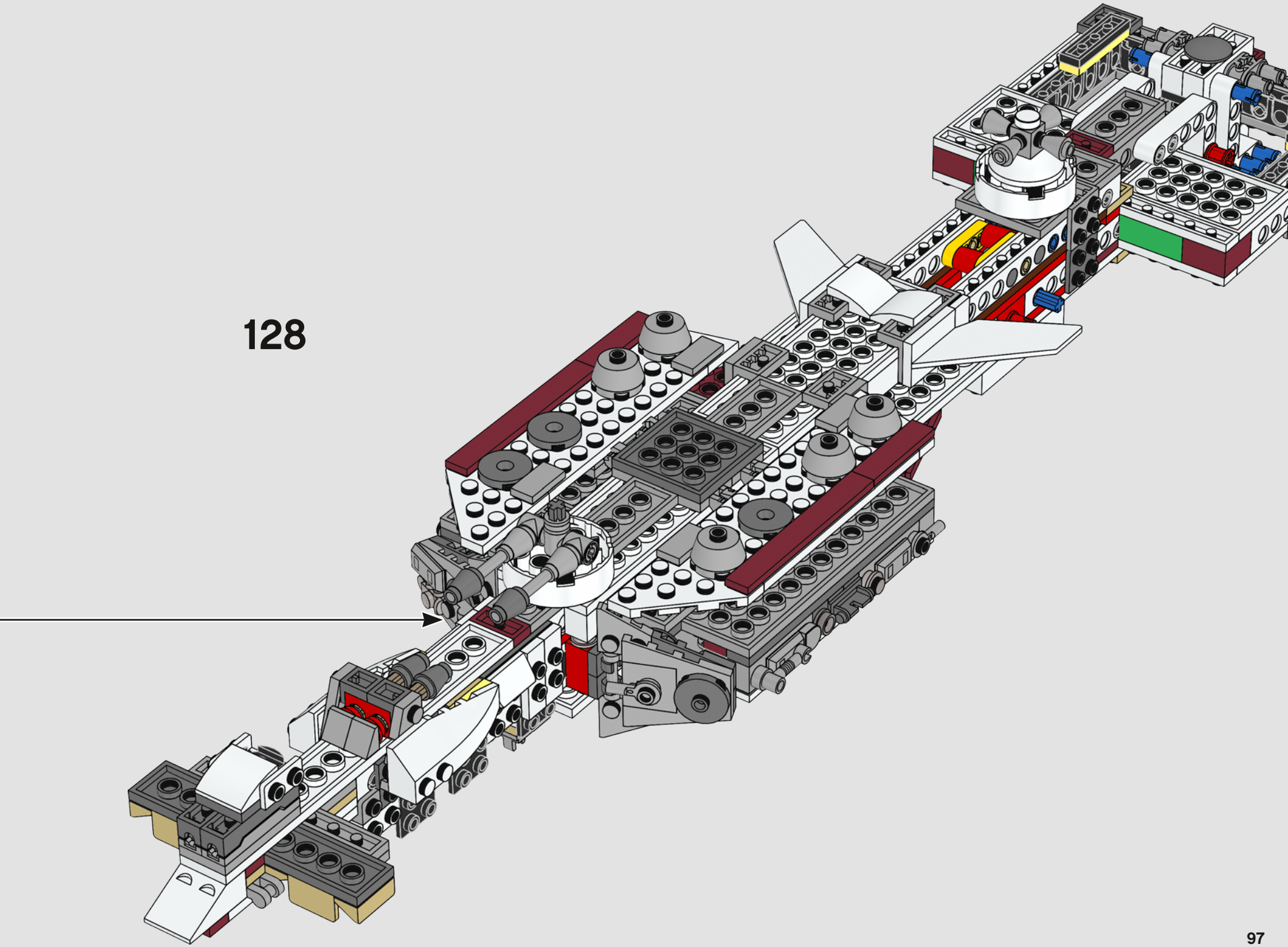

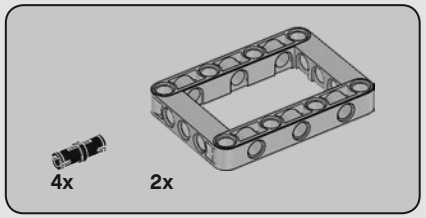

129

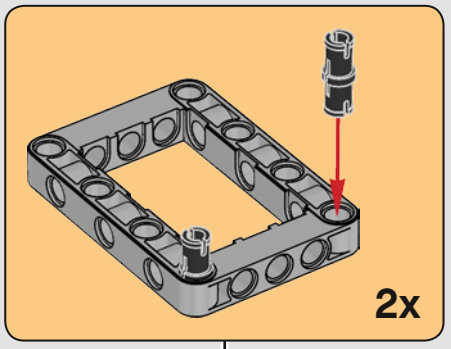

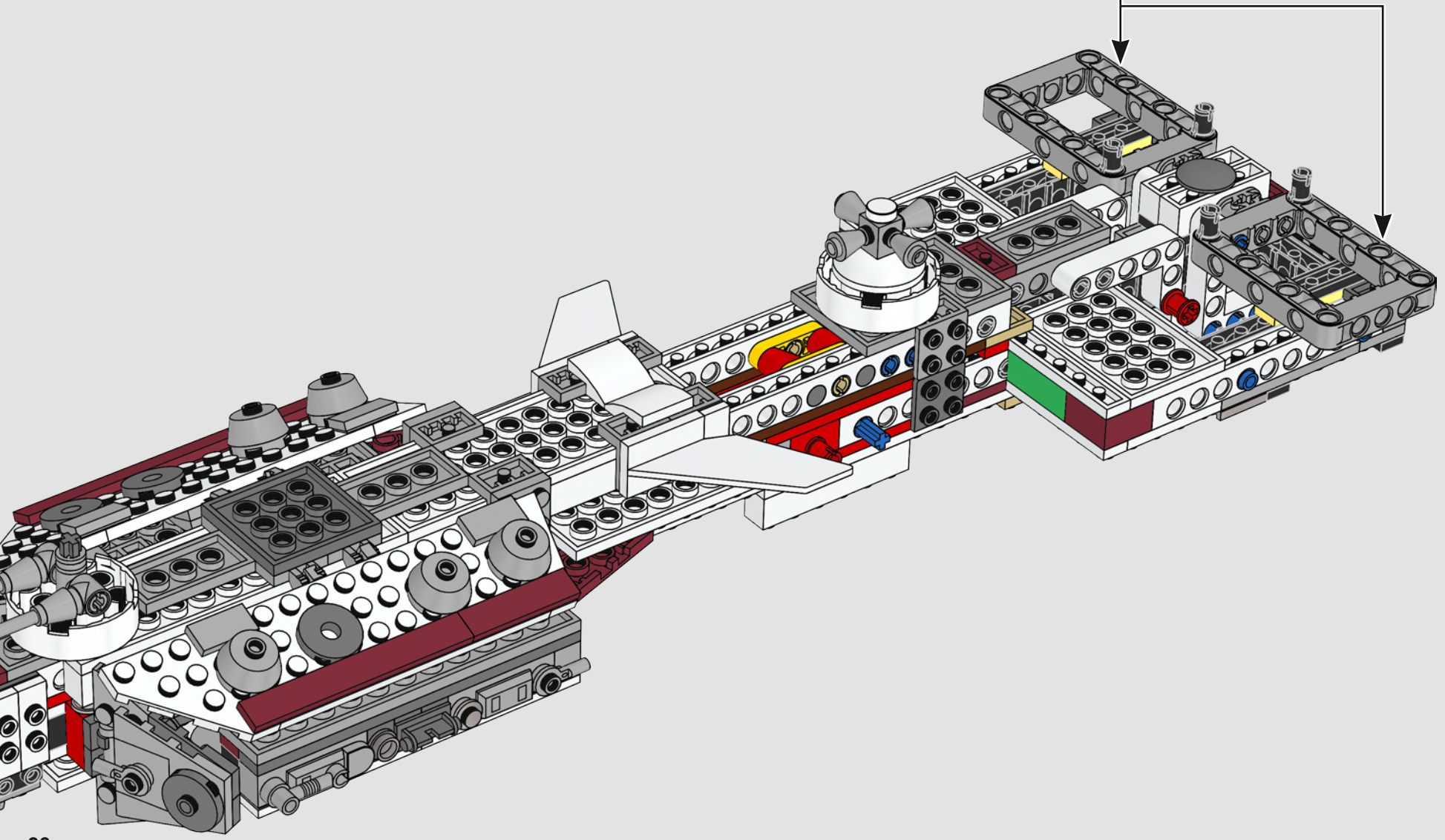

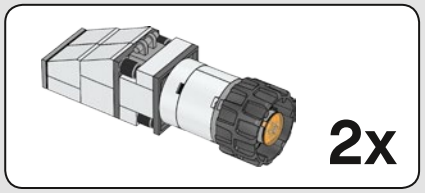

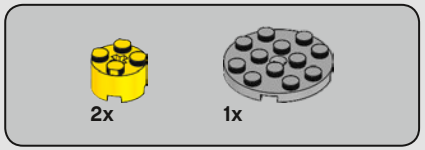

130

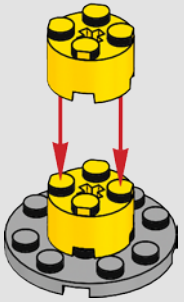

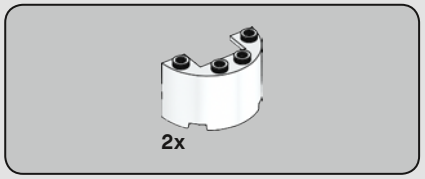

131

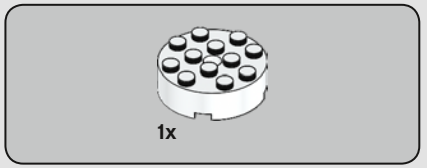

132

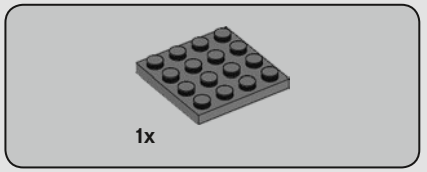

133

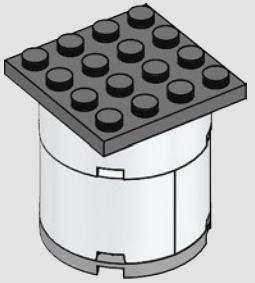

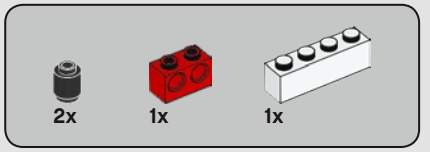

134

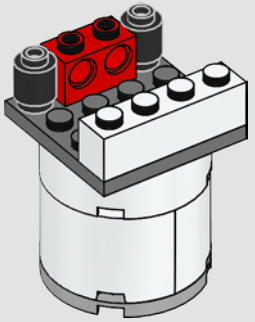

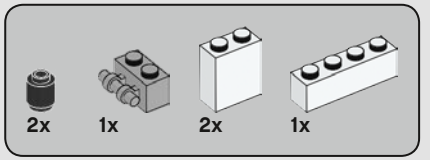

135

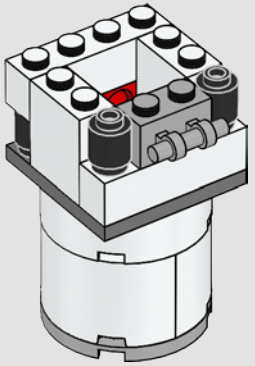

136

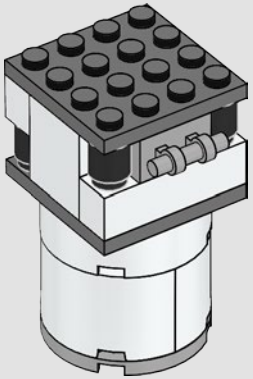

137

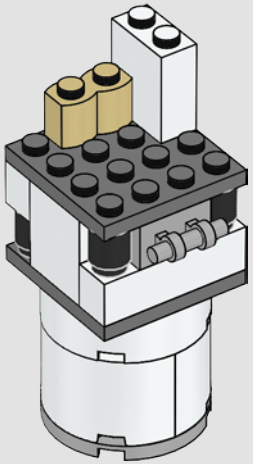

138

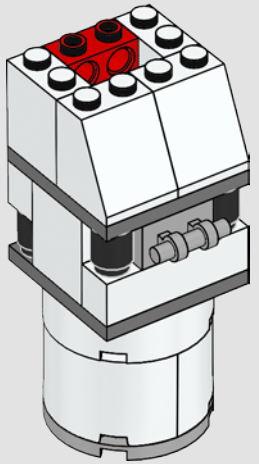

139

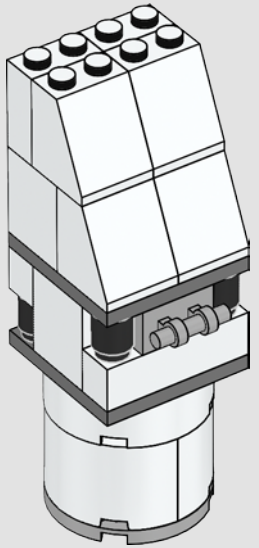

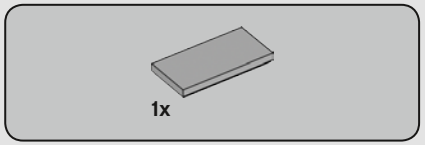

140

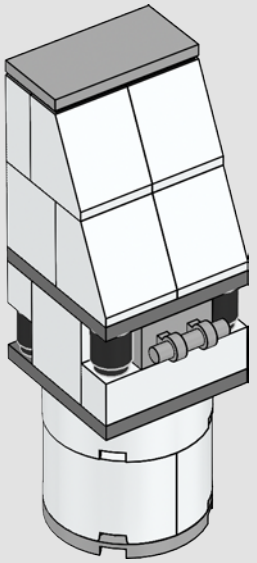

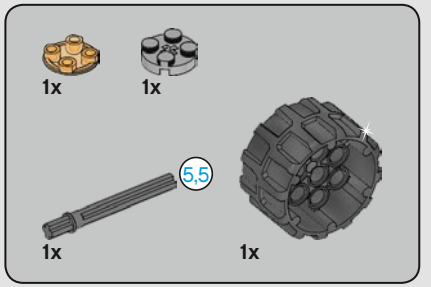

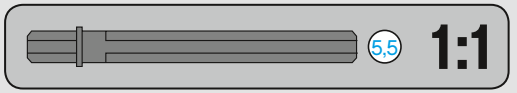

141

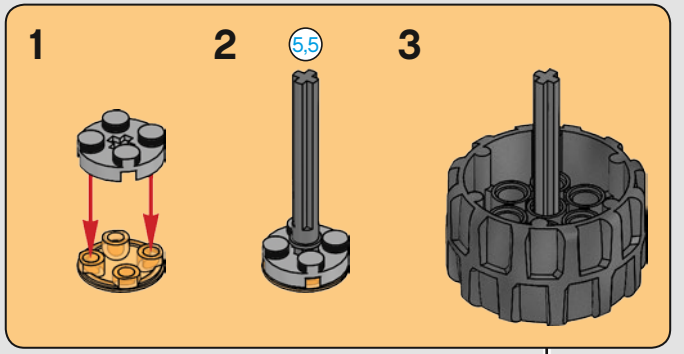

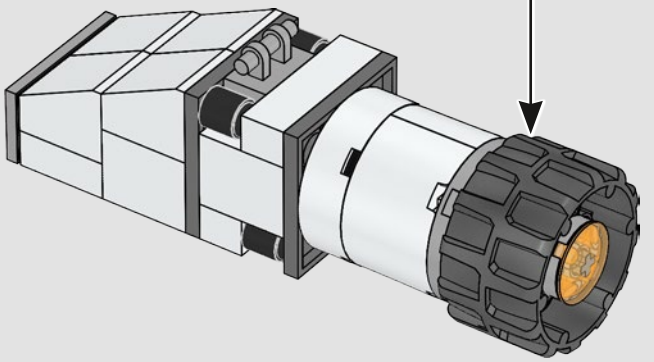

2x

142

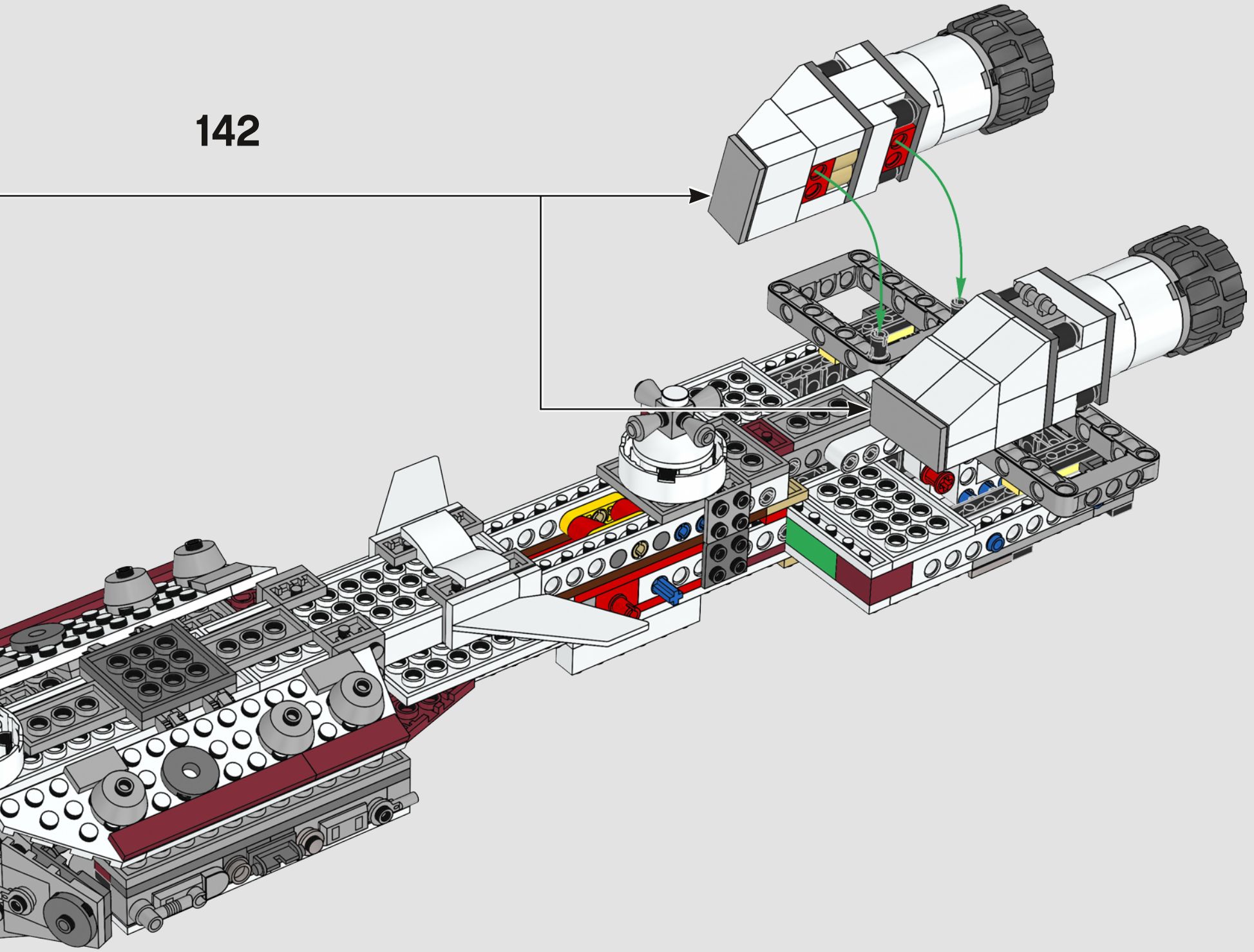

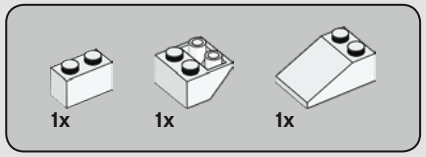

143

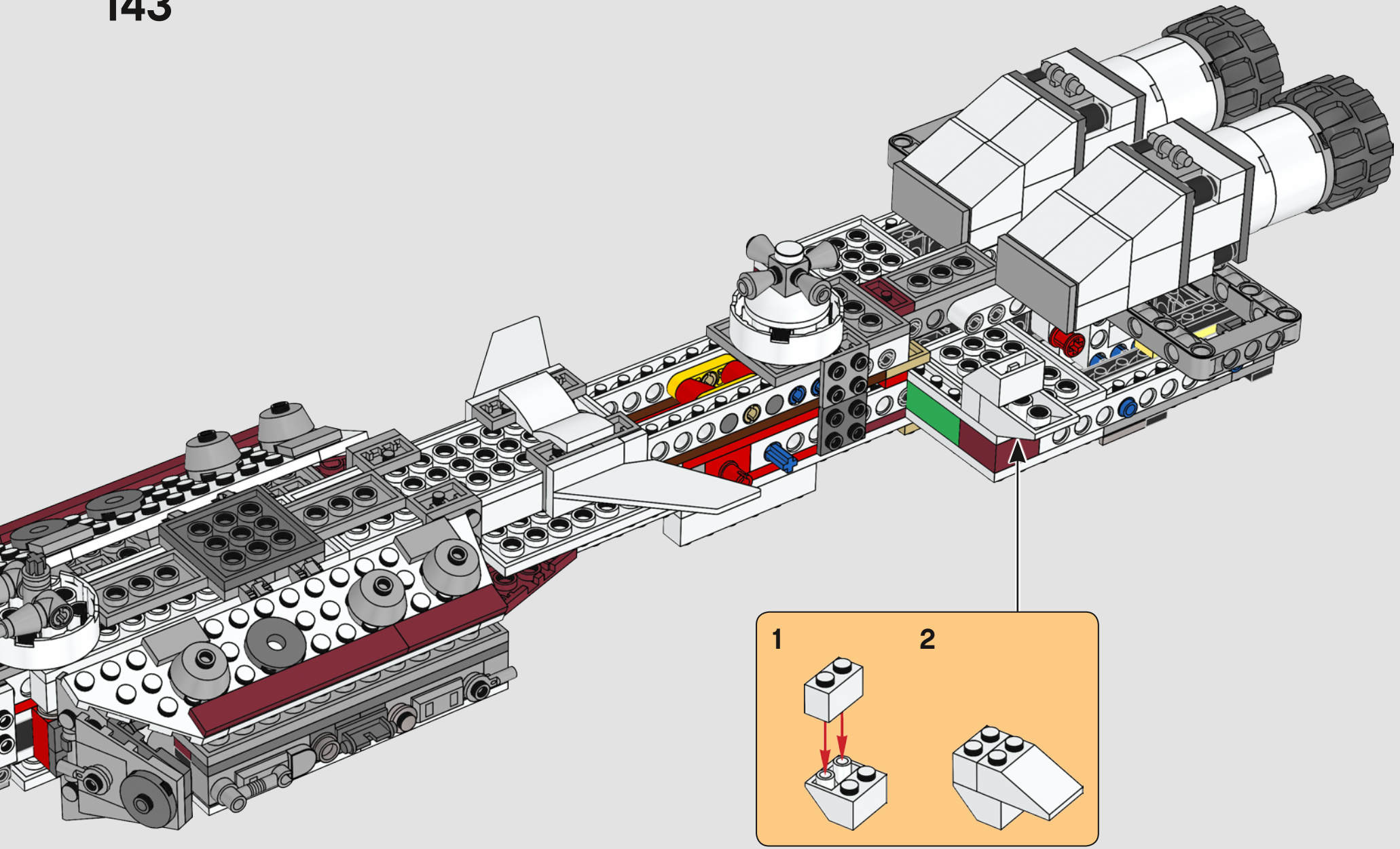

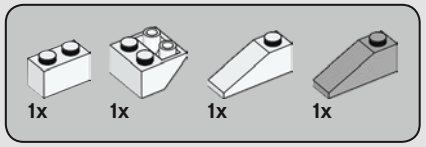

144

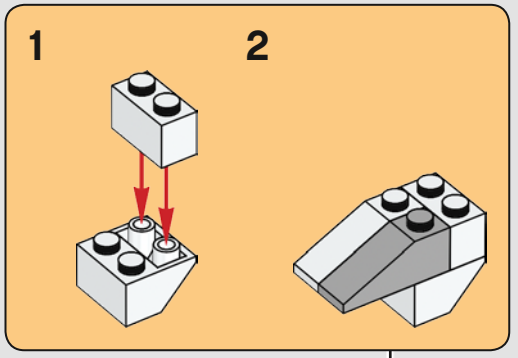

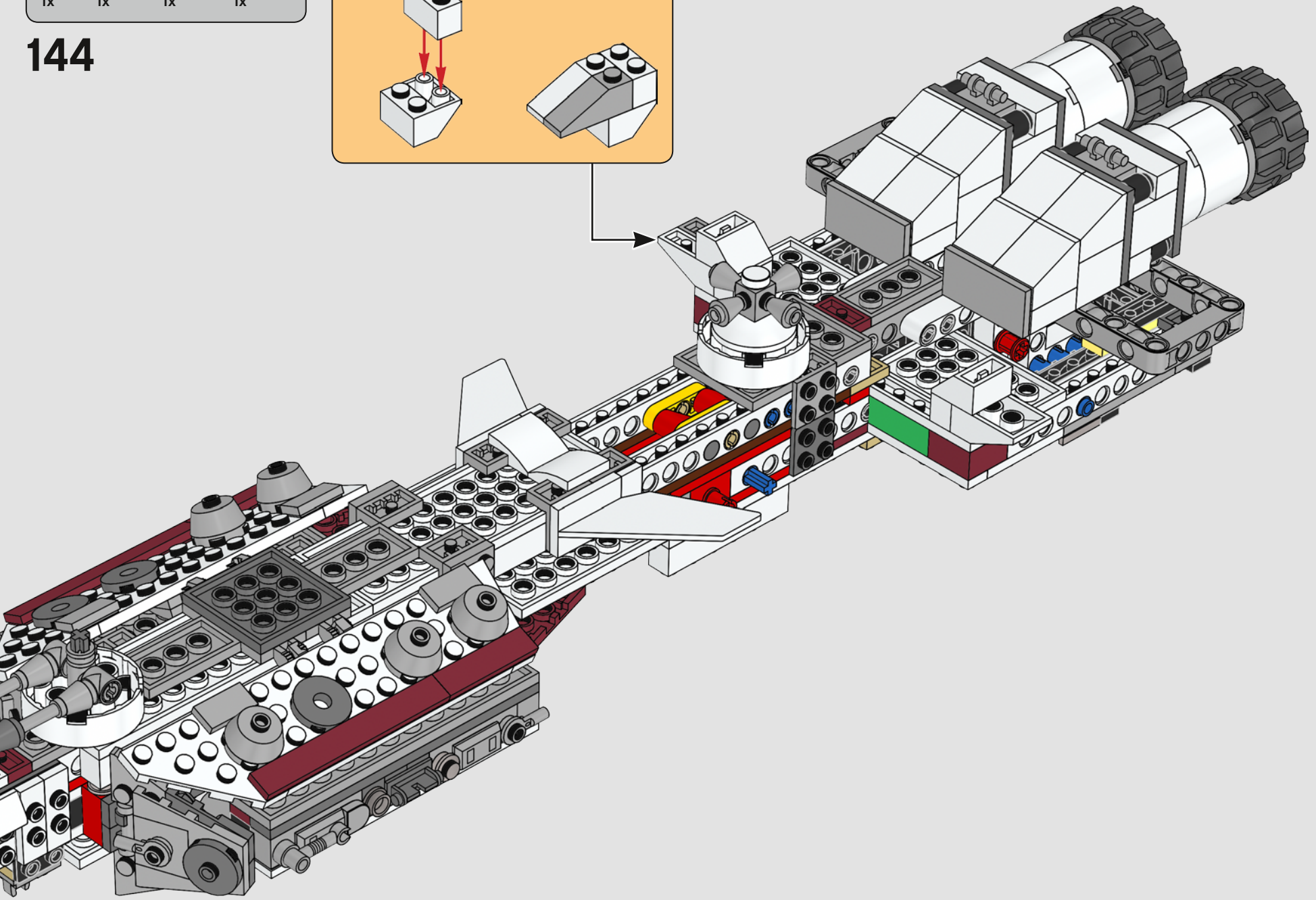

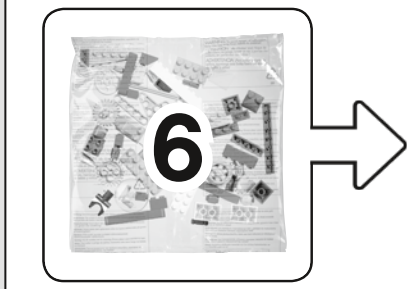
6

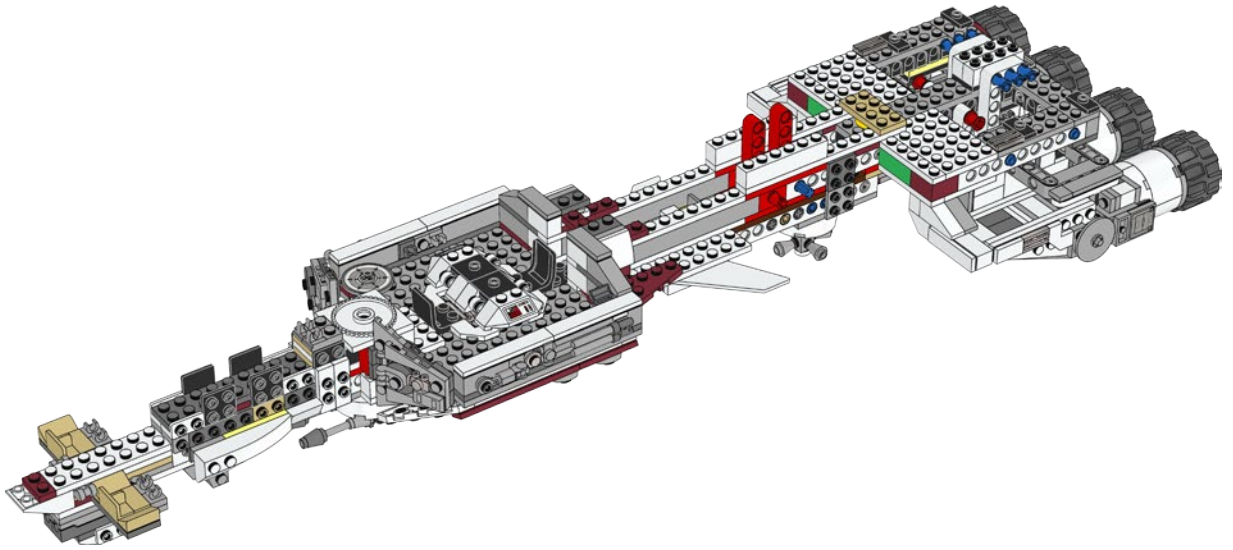

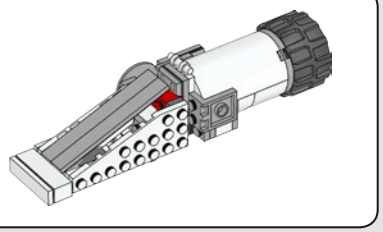

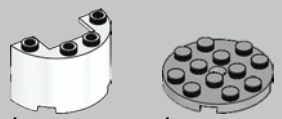

145

146

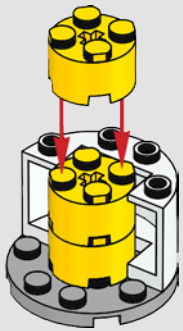

147

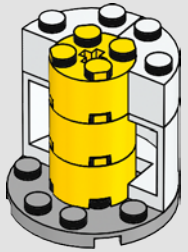

148

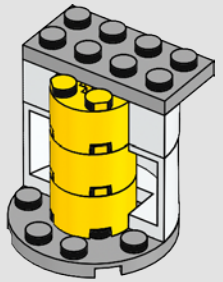

149

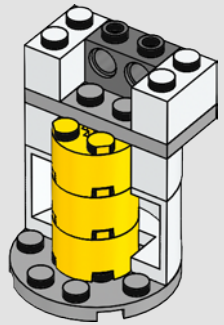

150

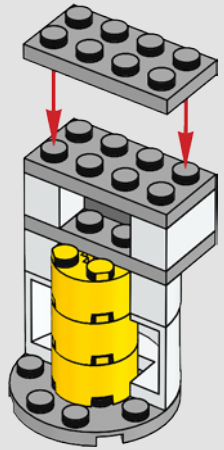

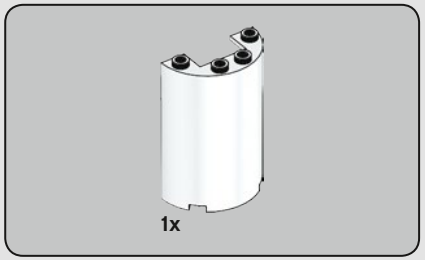

151

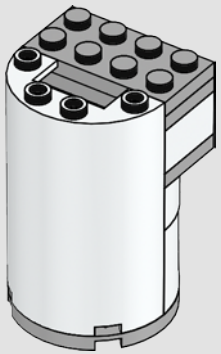

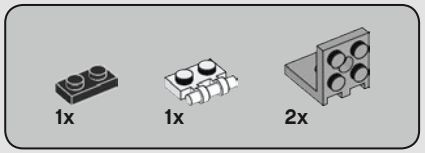

152

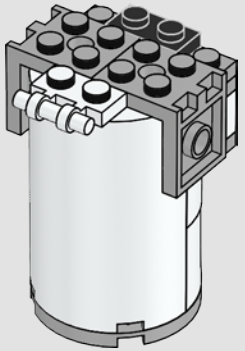

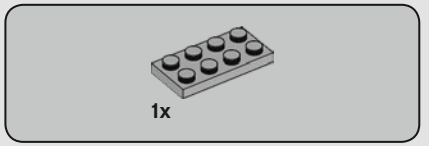

153

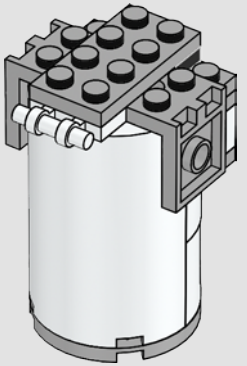

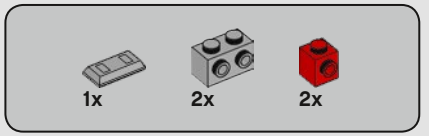

154

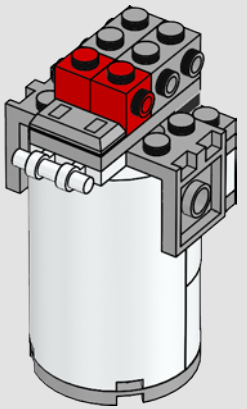

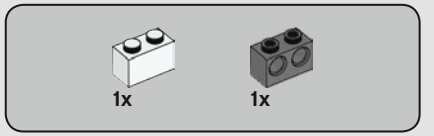

155

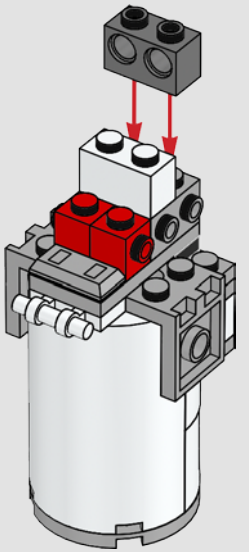

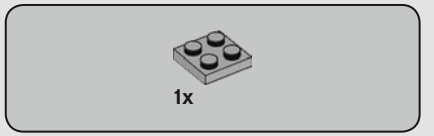

156

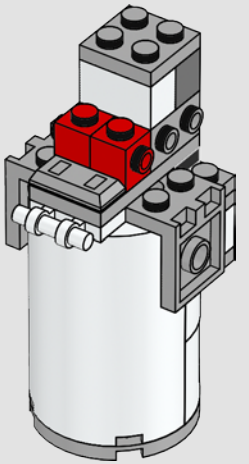

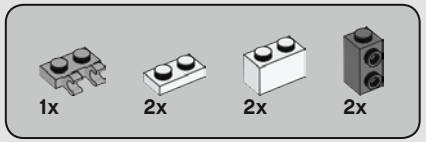

157

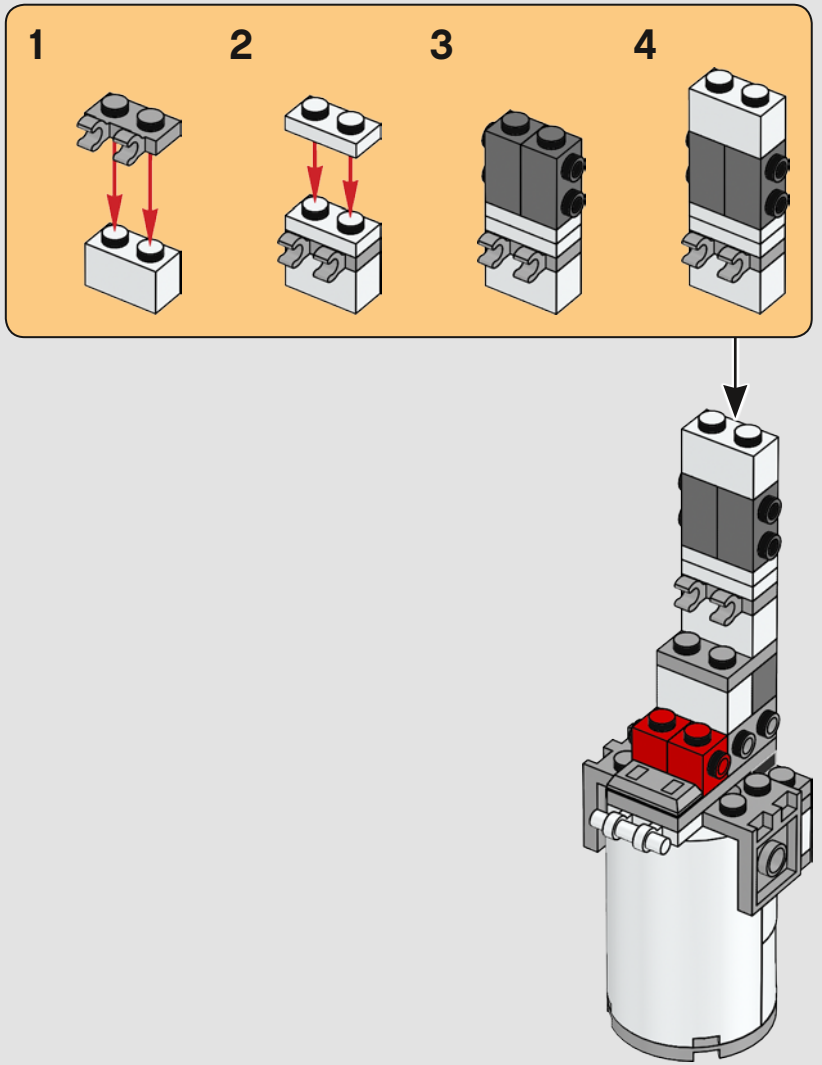

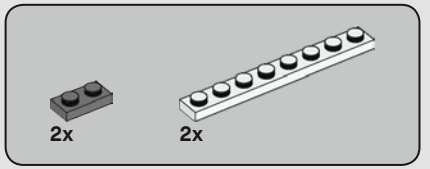

158

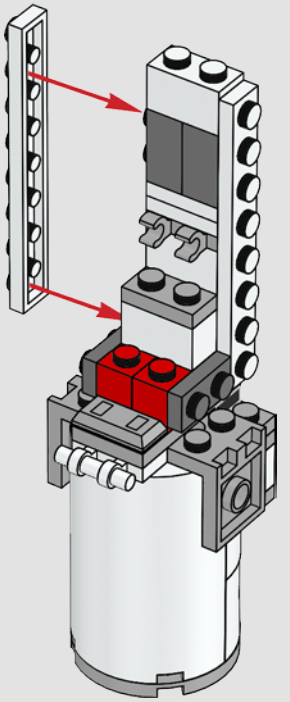

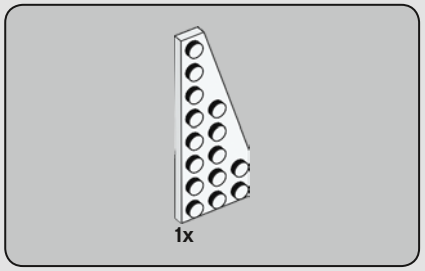

159

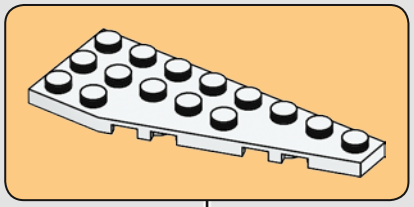

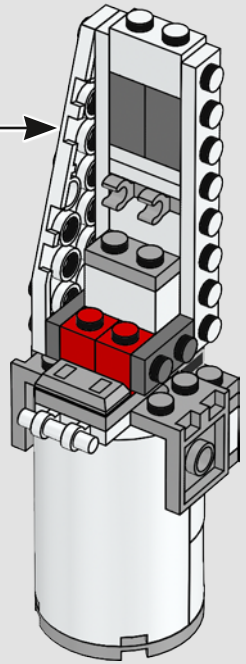

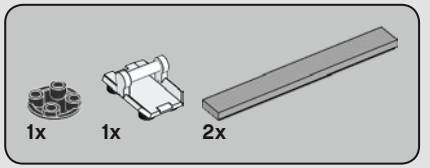

160

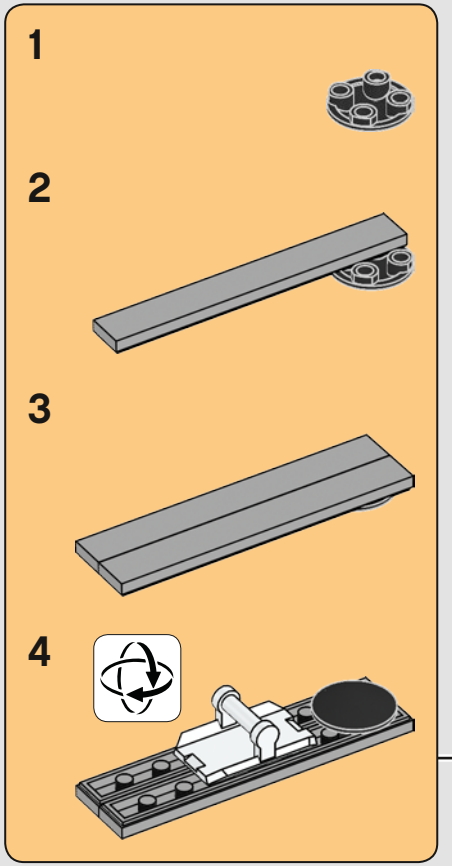

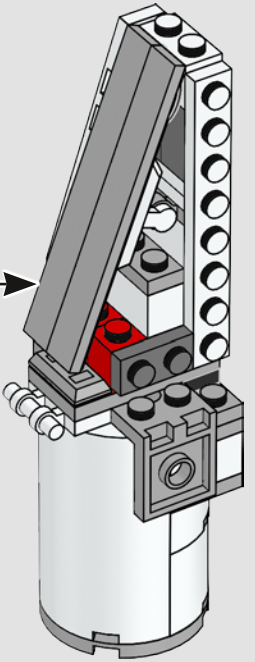

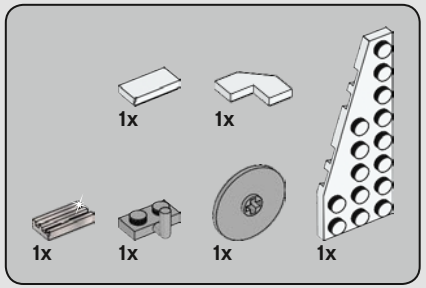

161

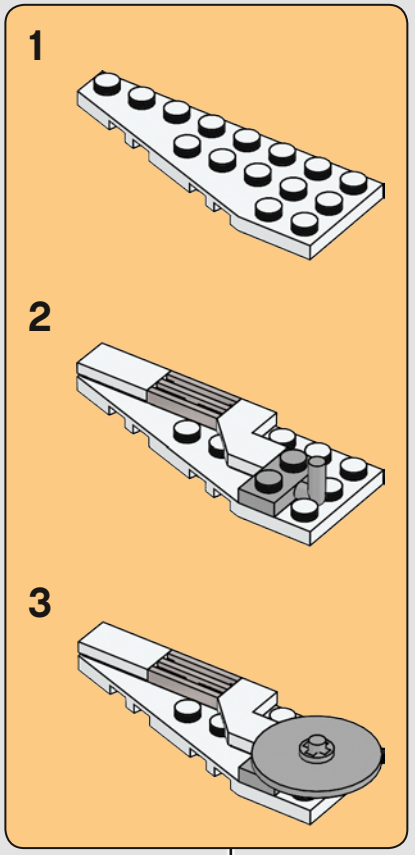

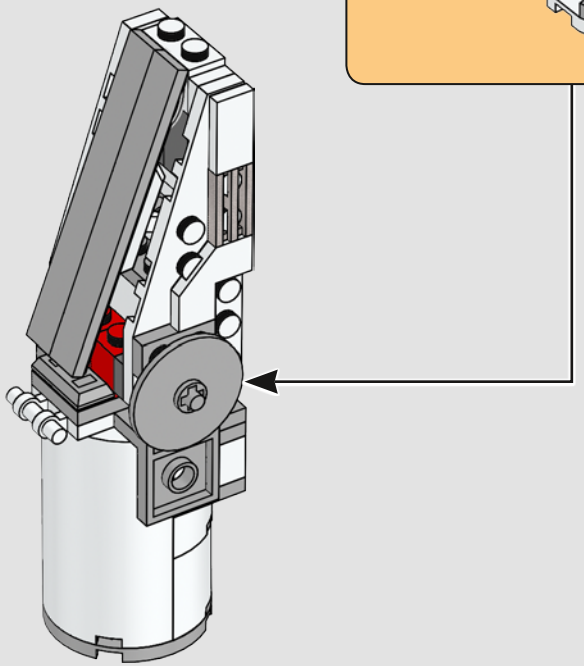

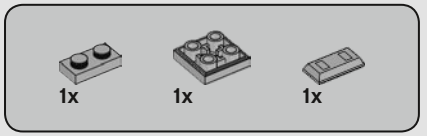

162

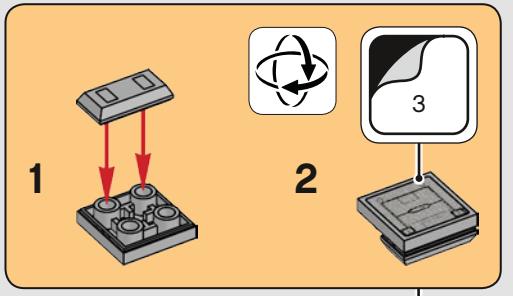

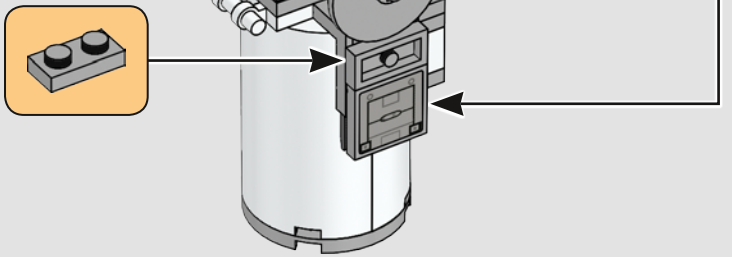

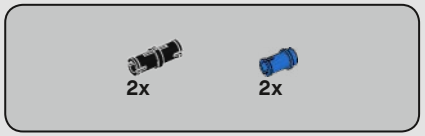

163

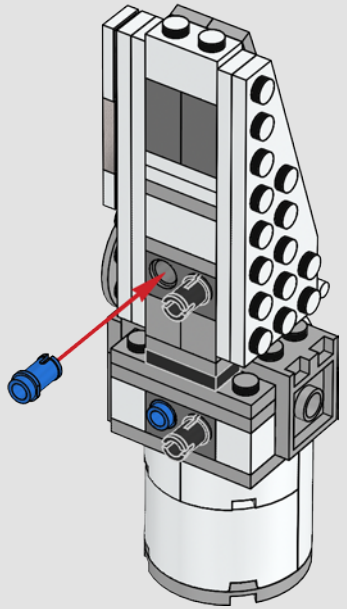

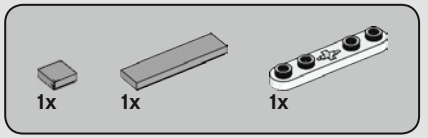

164

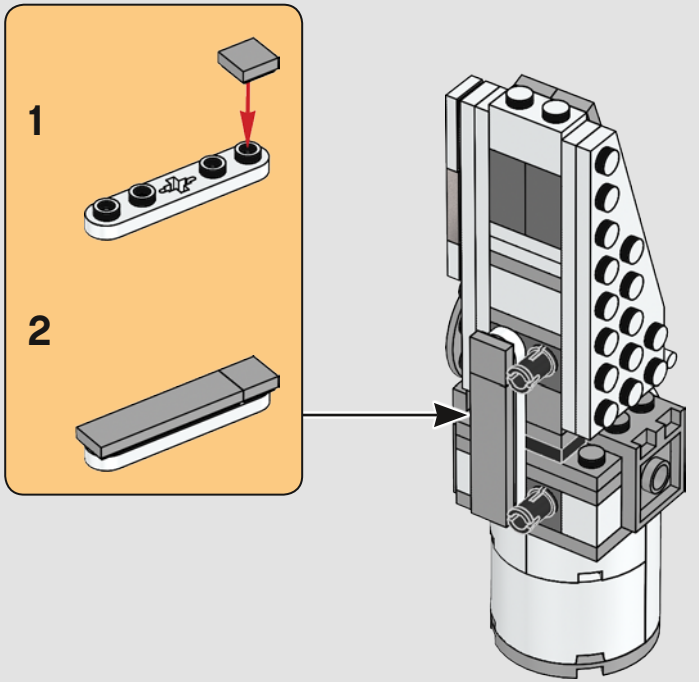

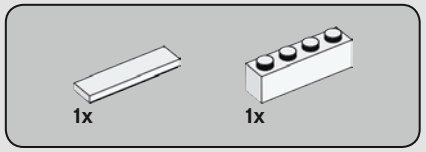

165

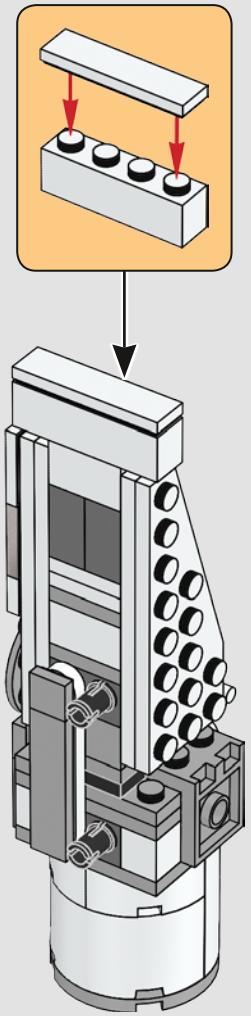

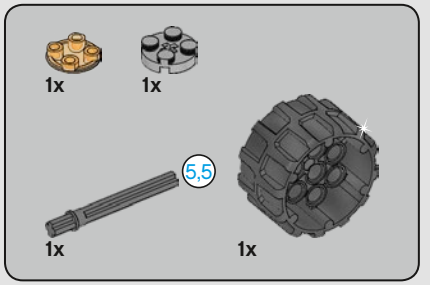

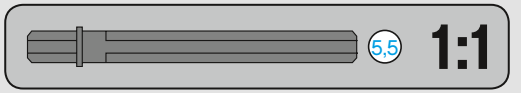

166

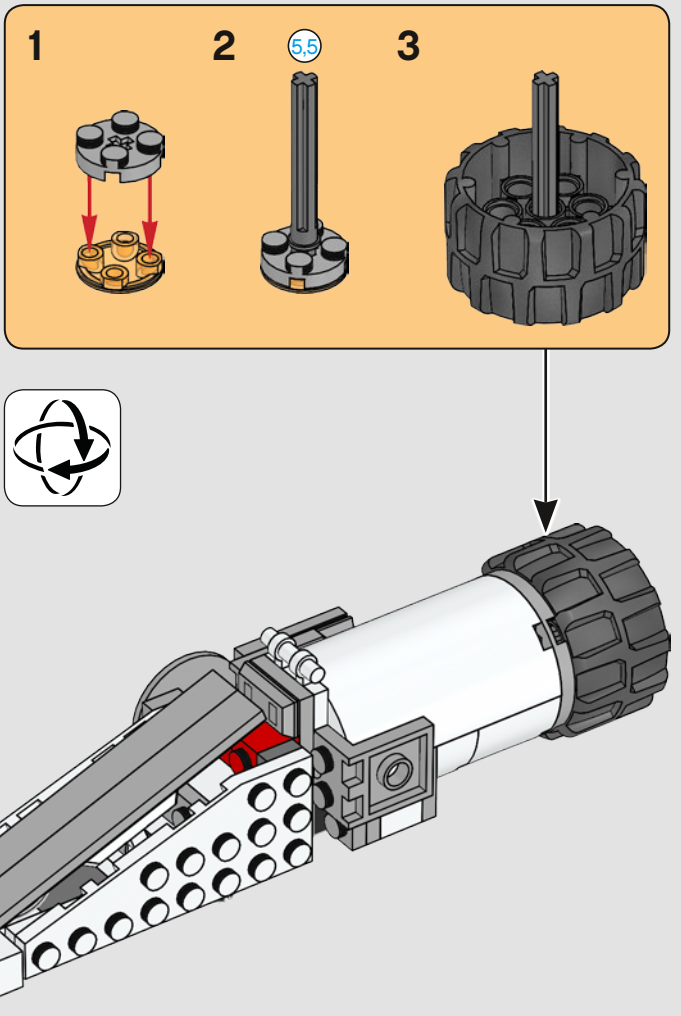

167

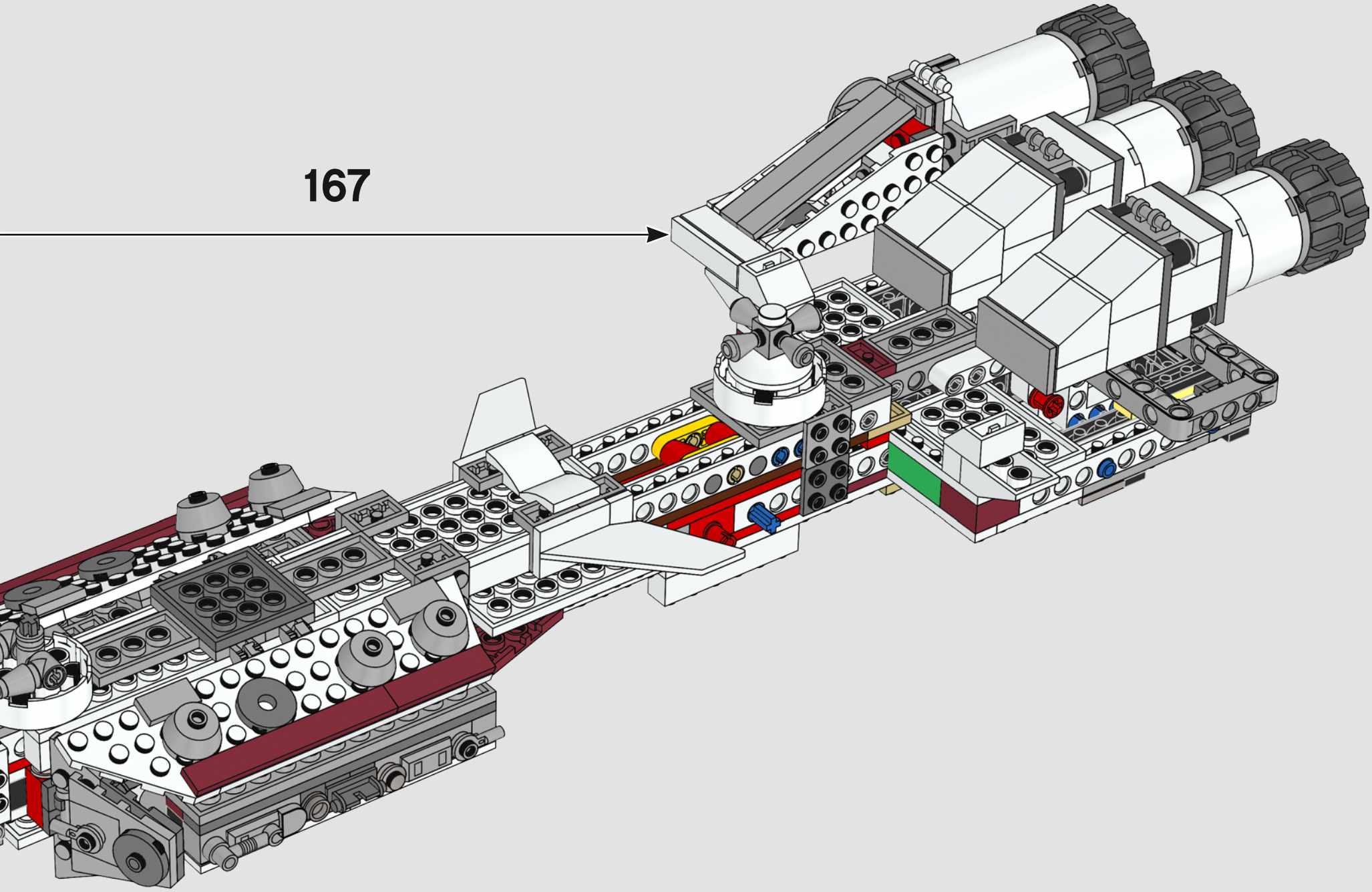

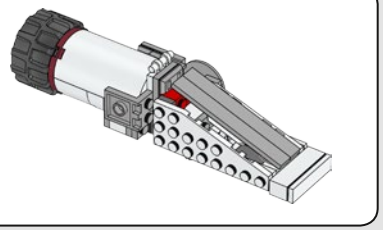

168

169

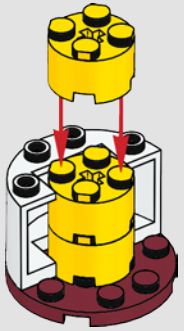

170

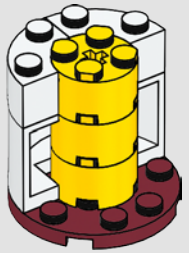

171

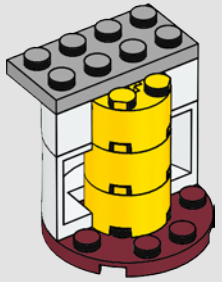

172

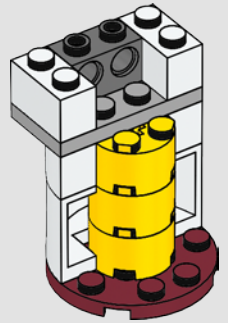

173

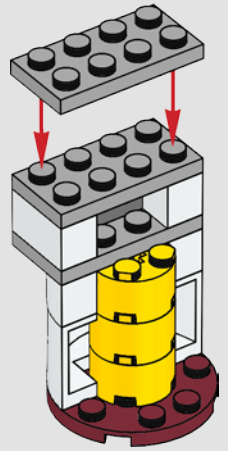

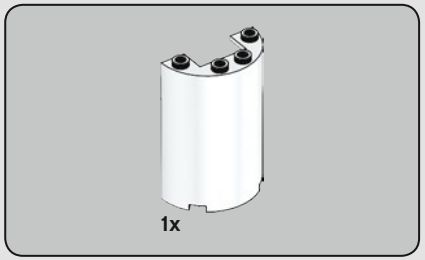

174

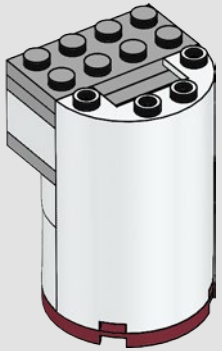

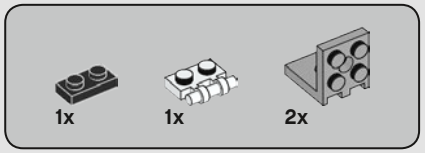

175

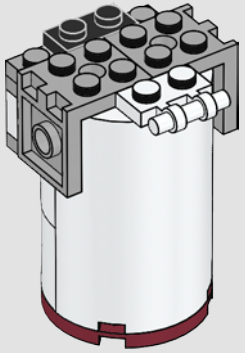

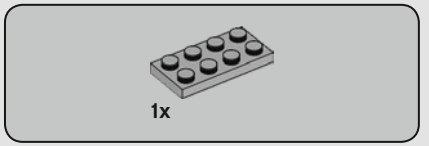

176

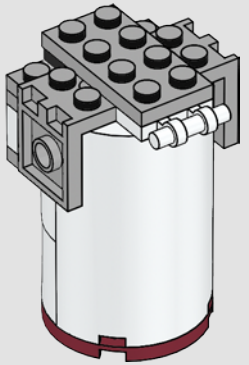

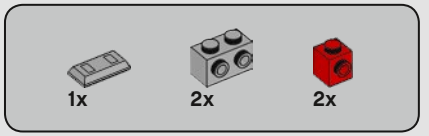

177

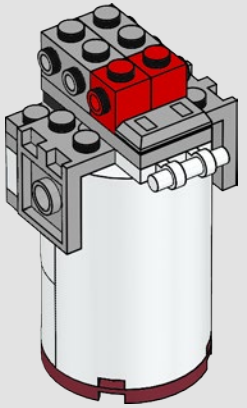

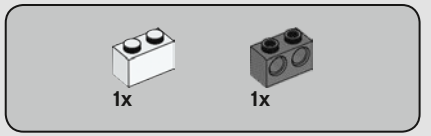

178

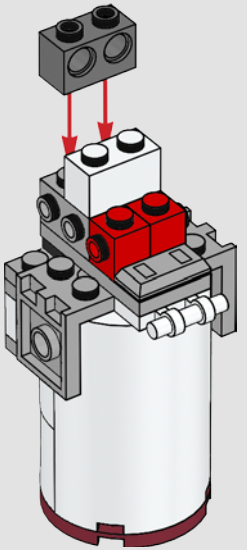

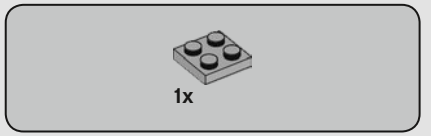

179

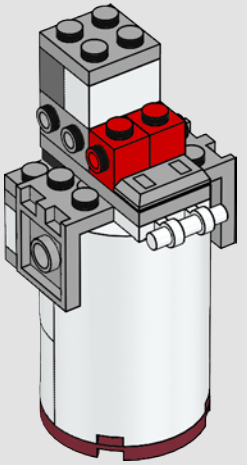

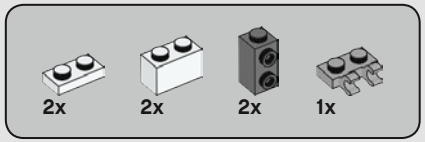

180

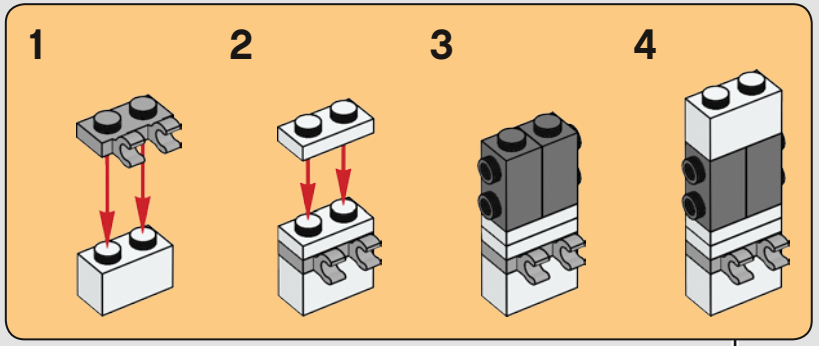

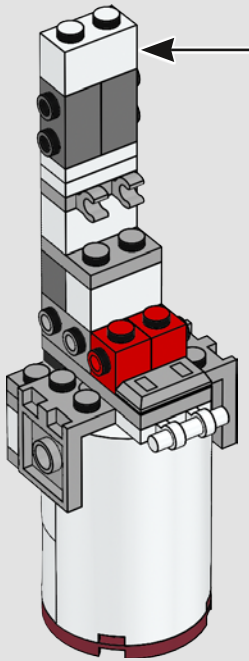

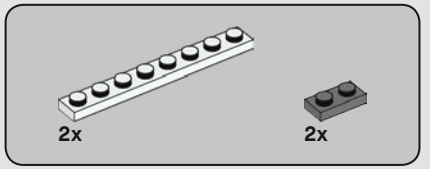

181

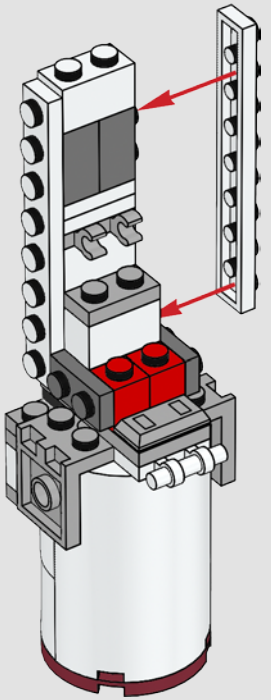

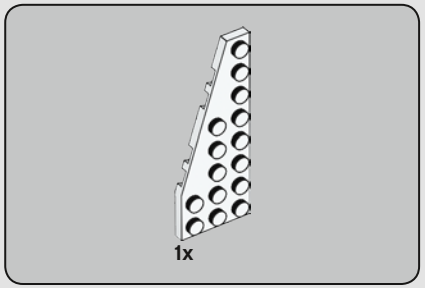

182

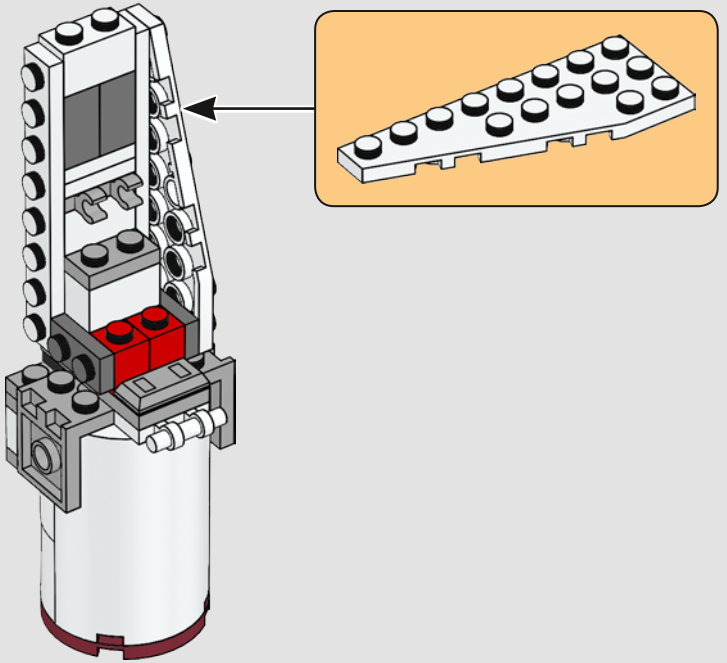

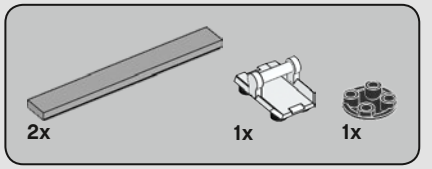

183

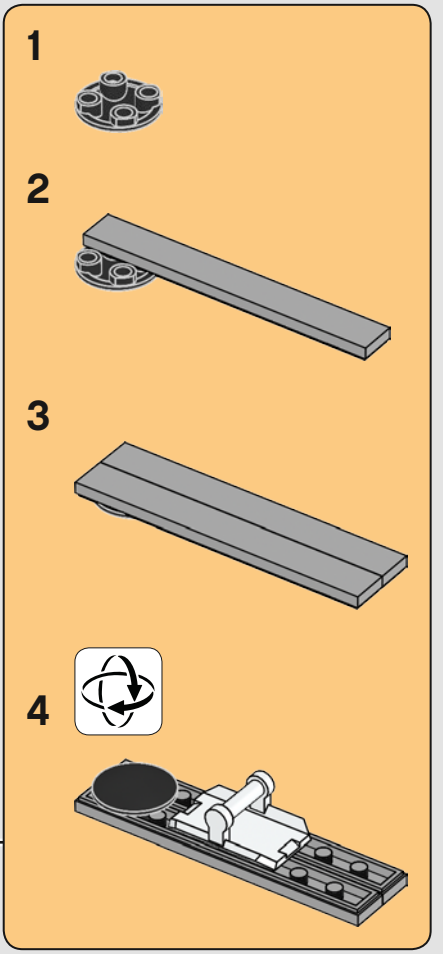

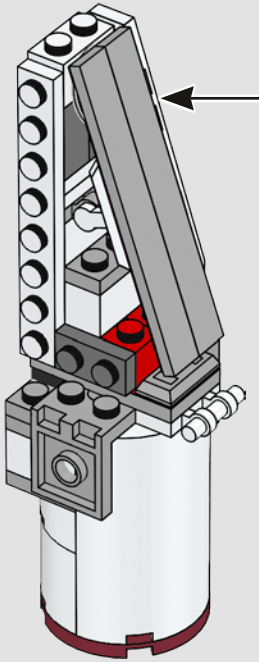

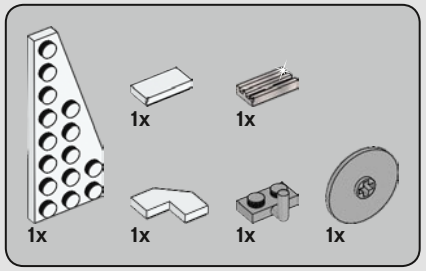

184

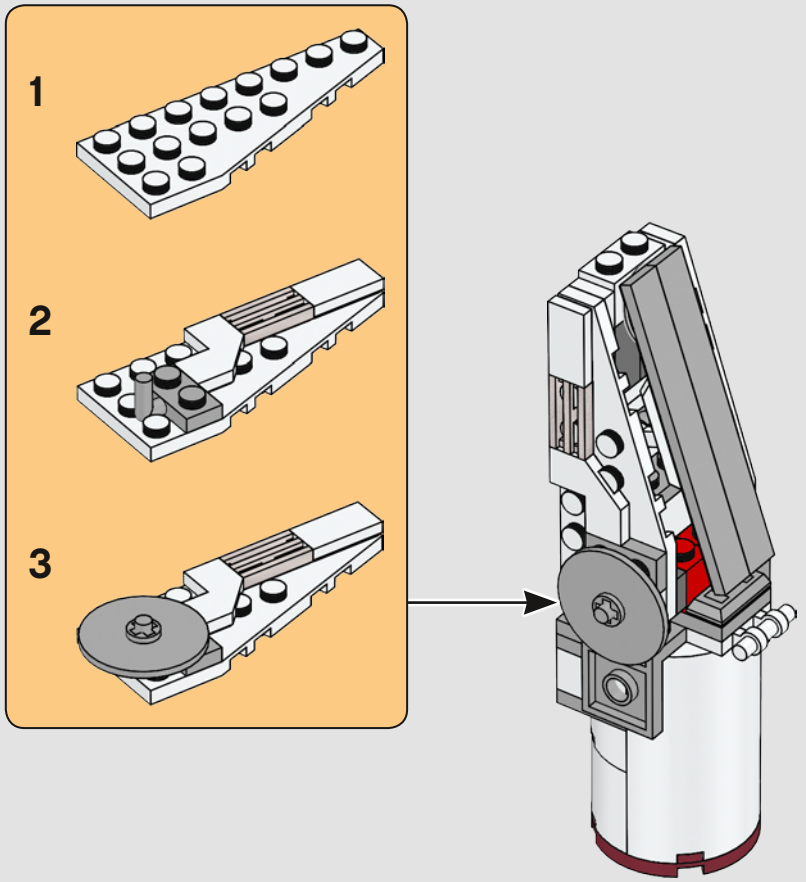

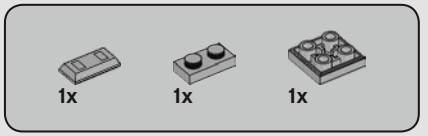

185

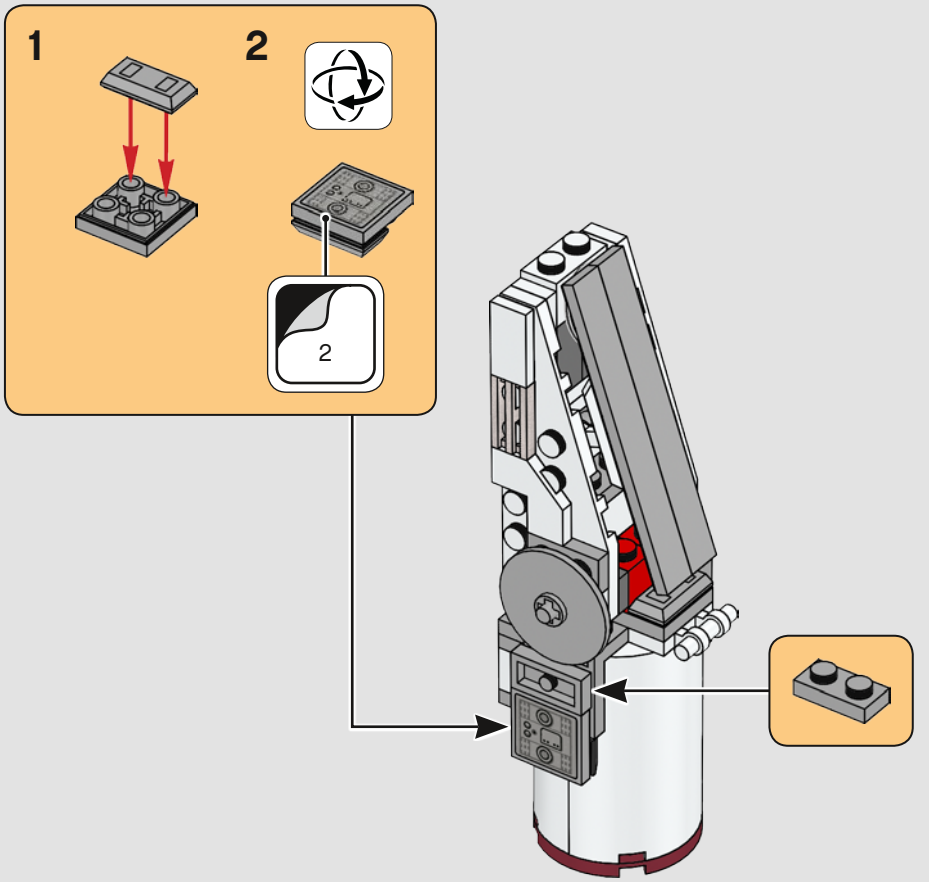

186

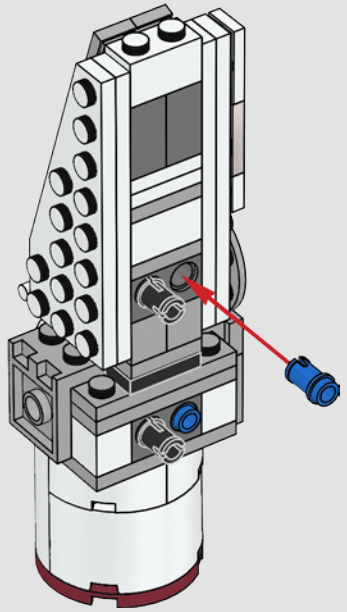

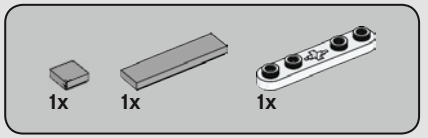

187

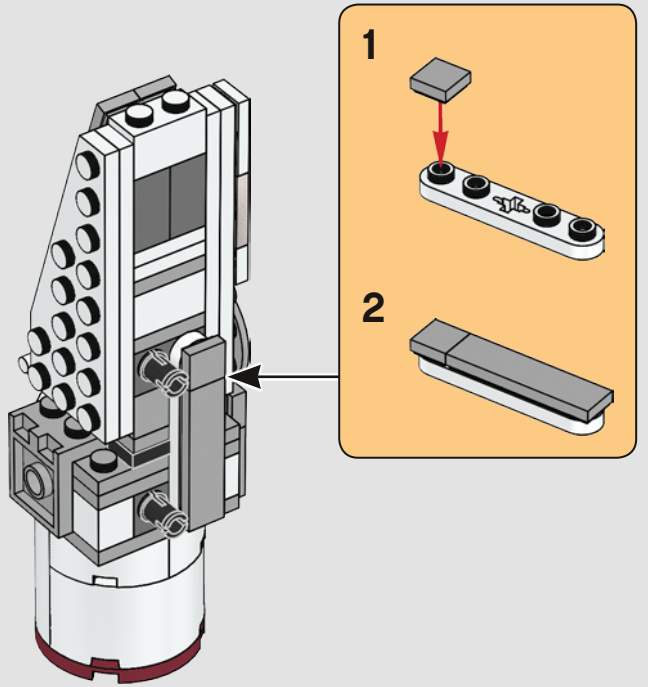

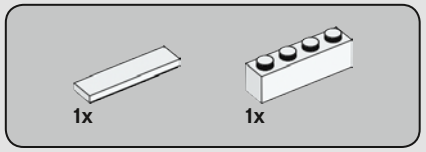

188

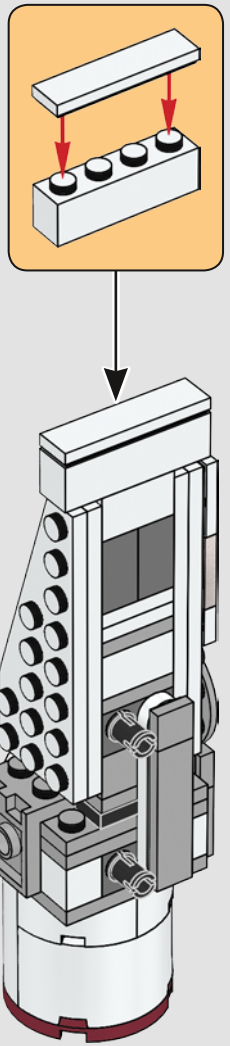

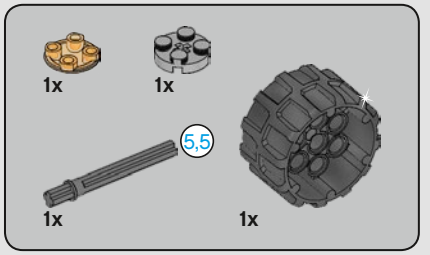

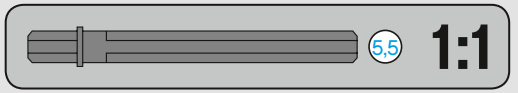

189

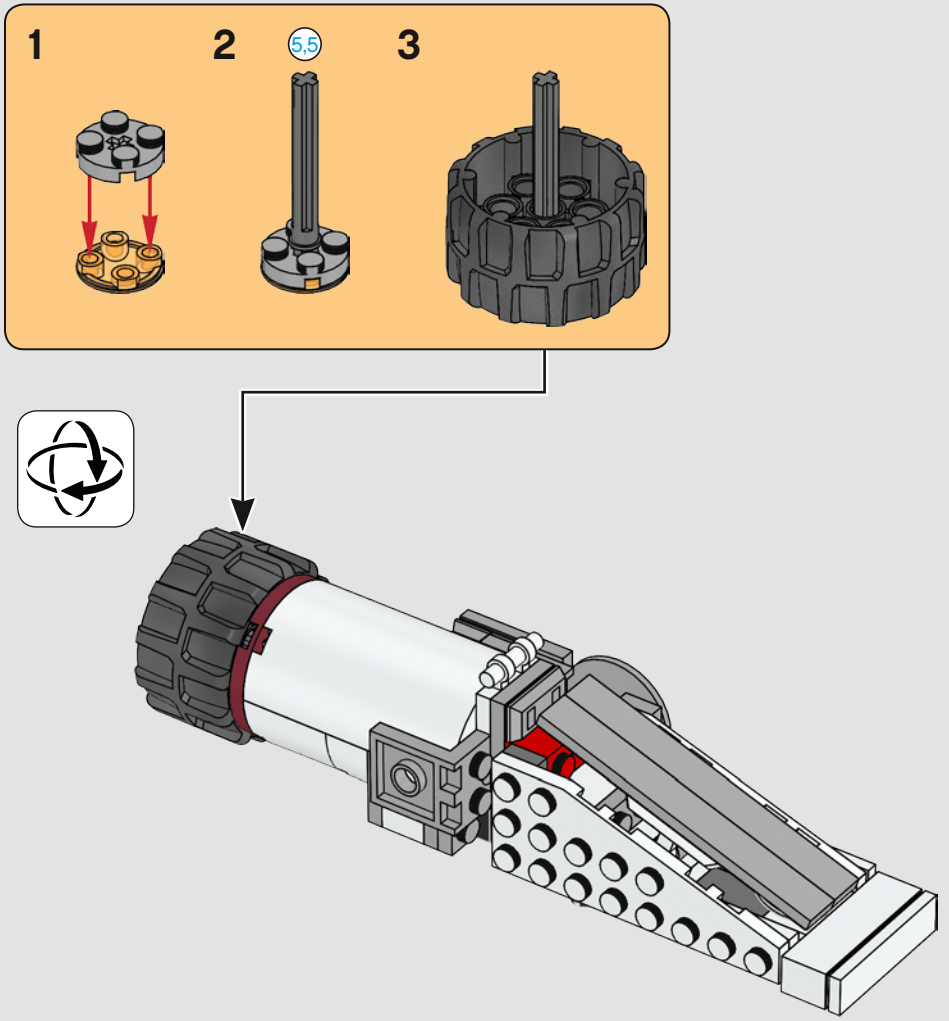

190

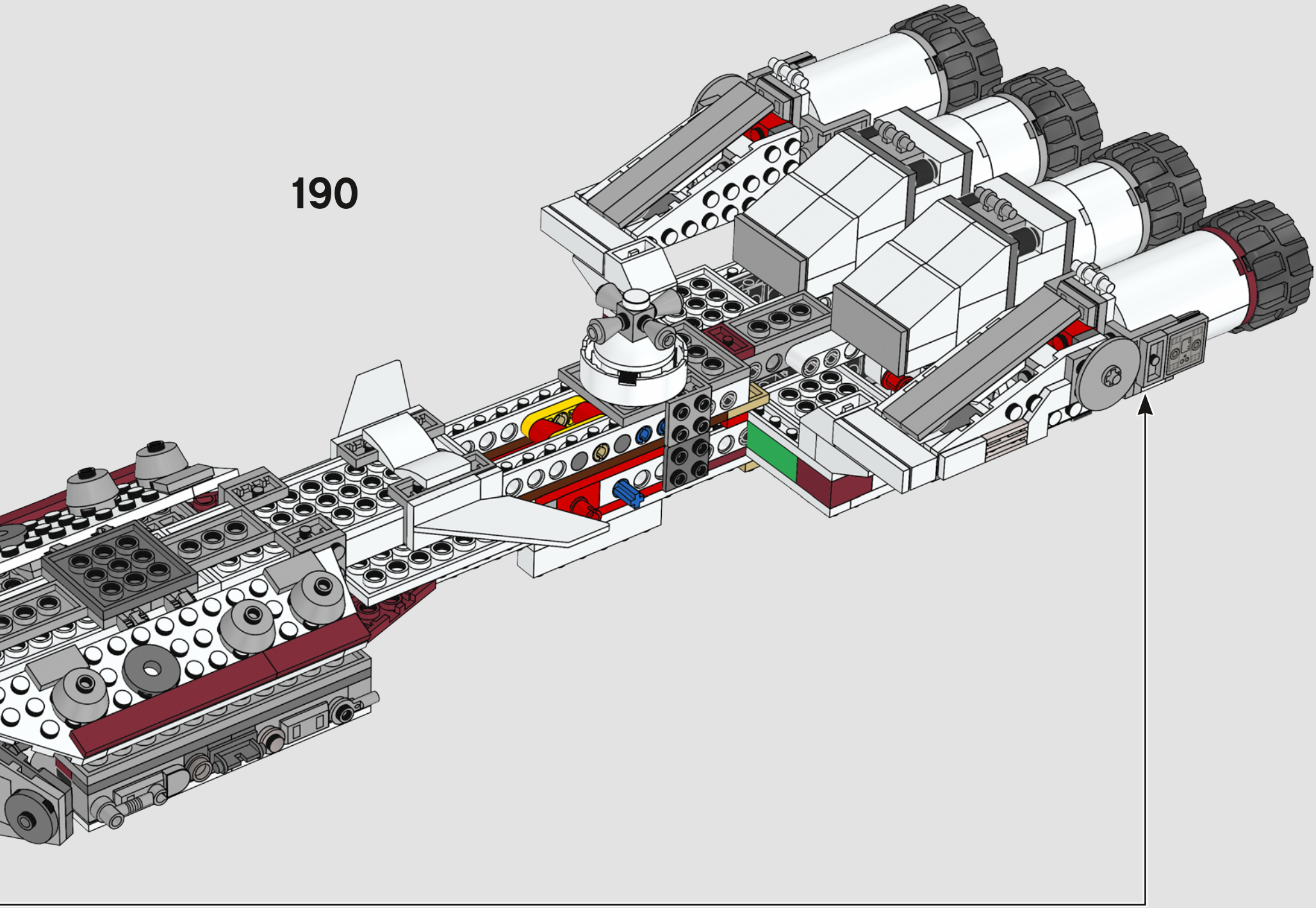

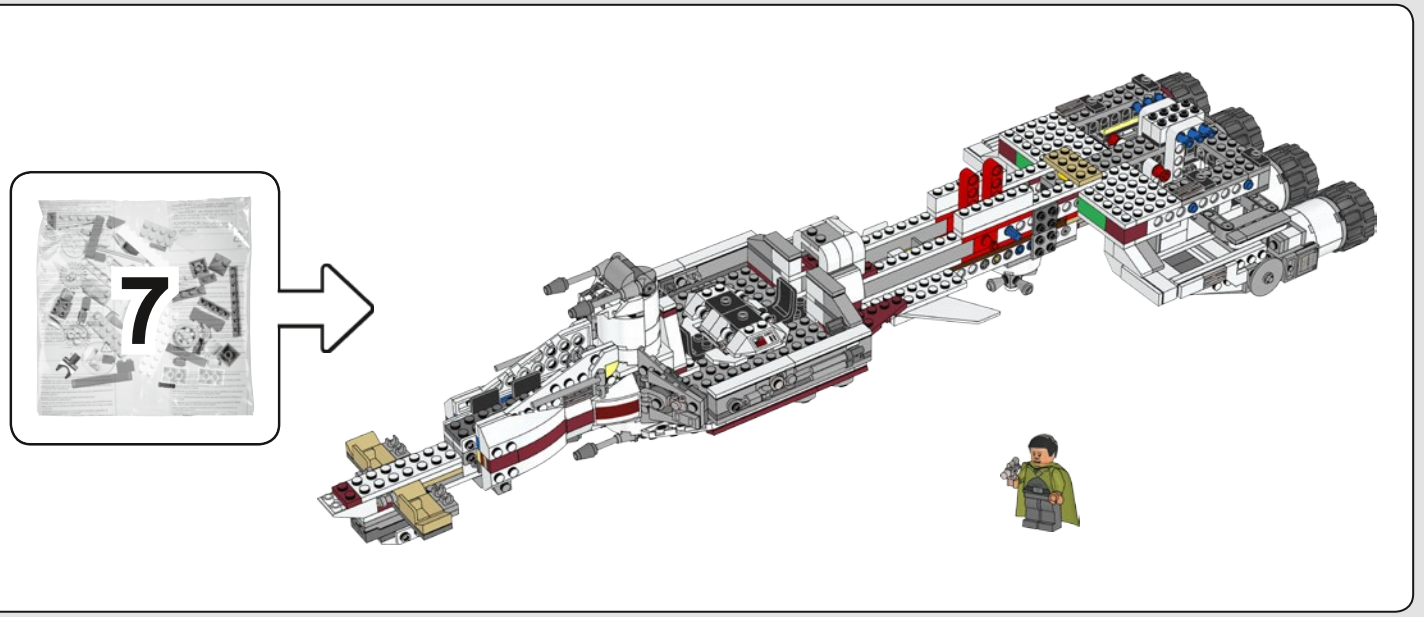
7

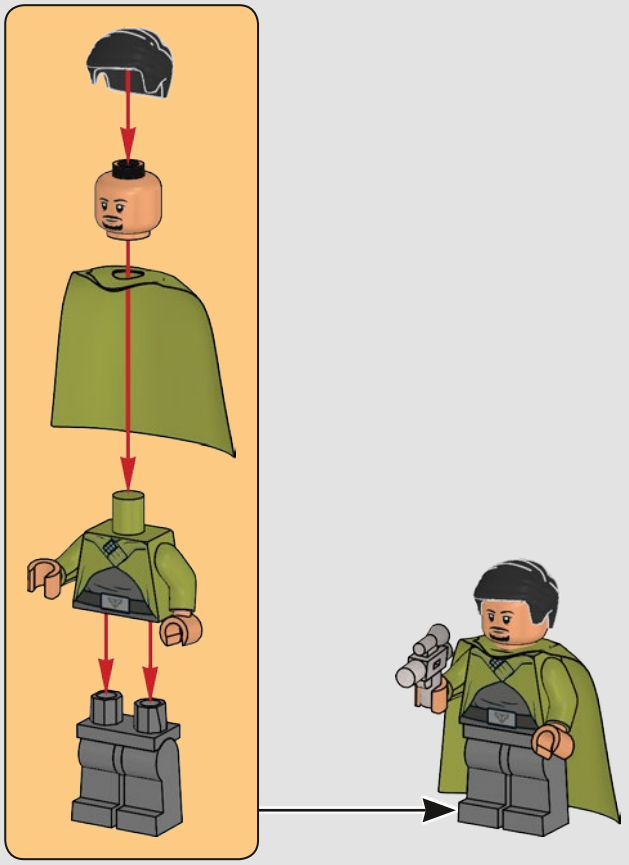

2x

191

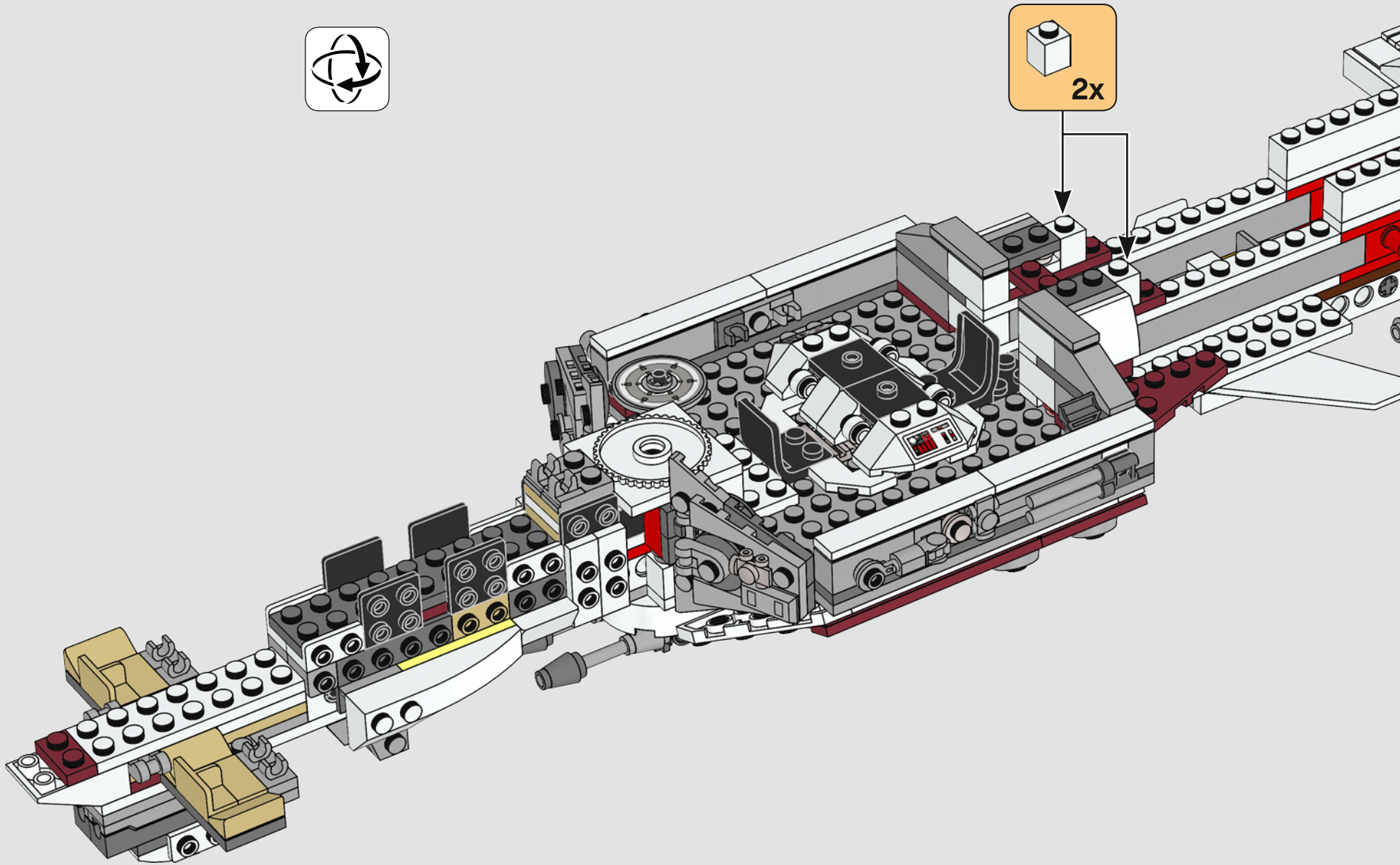

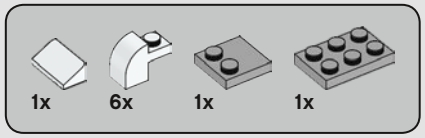

192

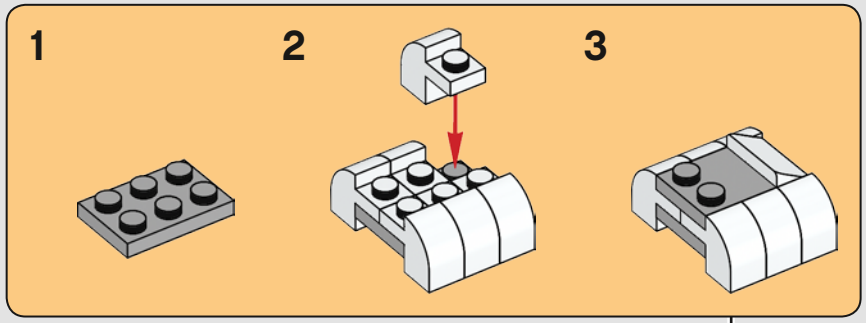

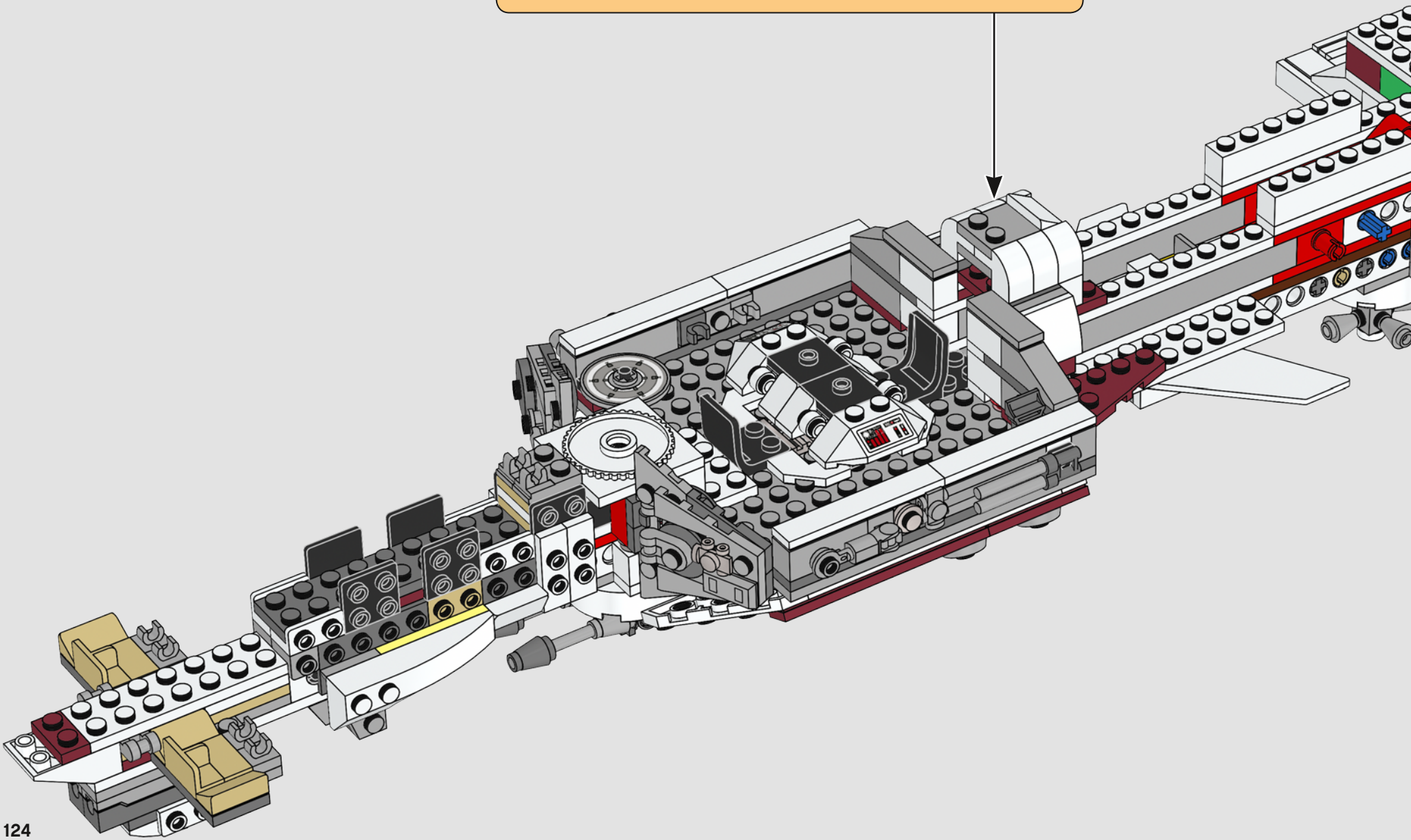

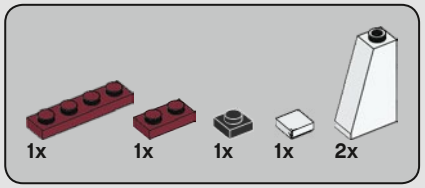

193

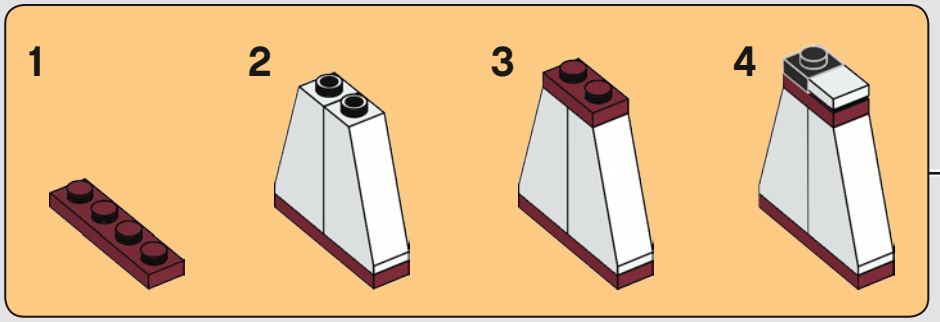

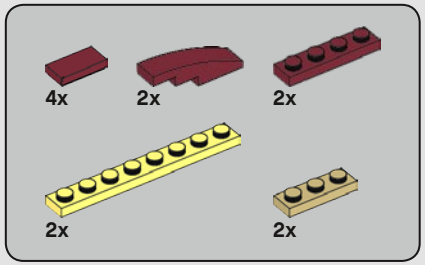

194

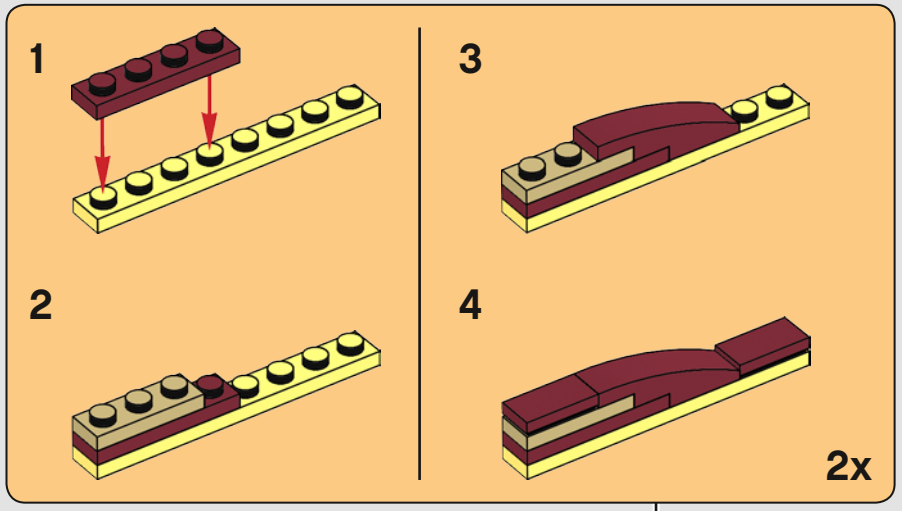

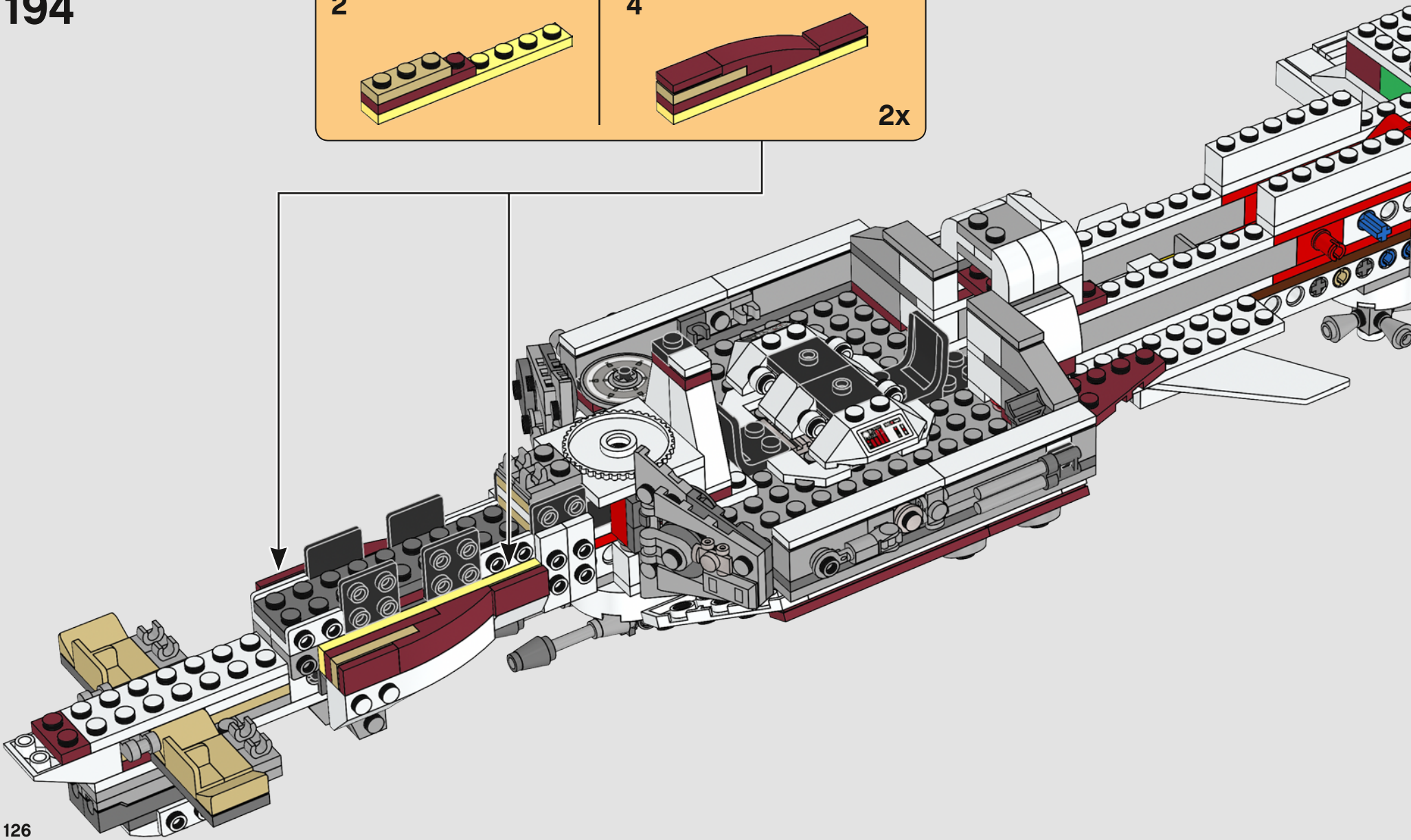

2x

195

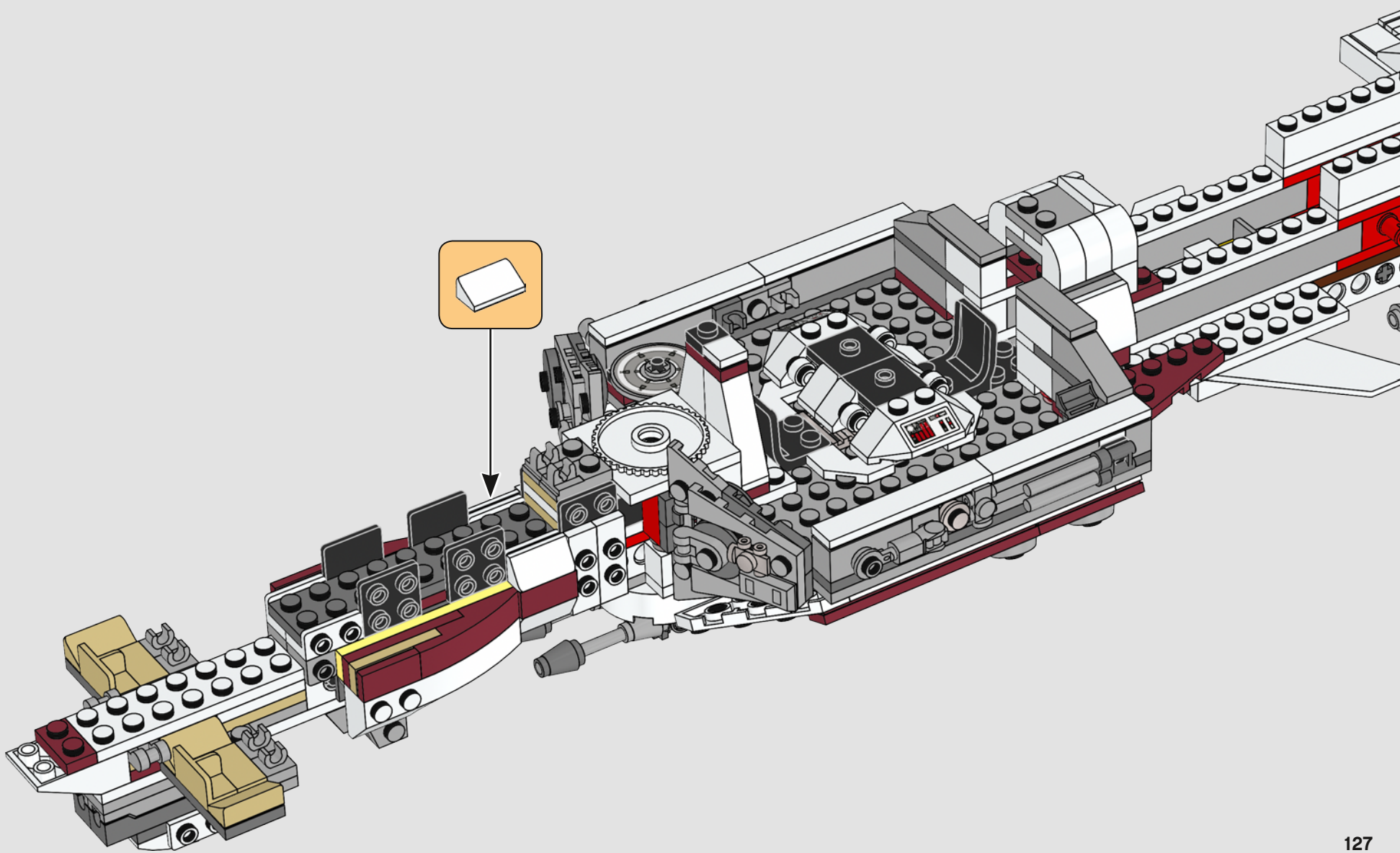

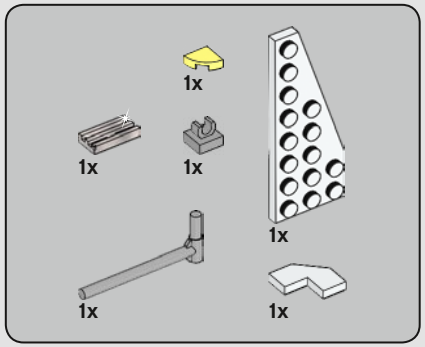

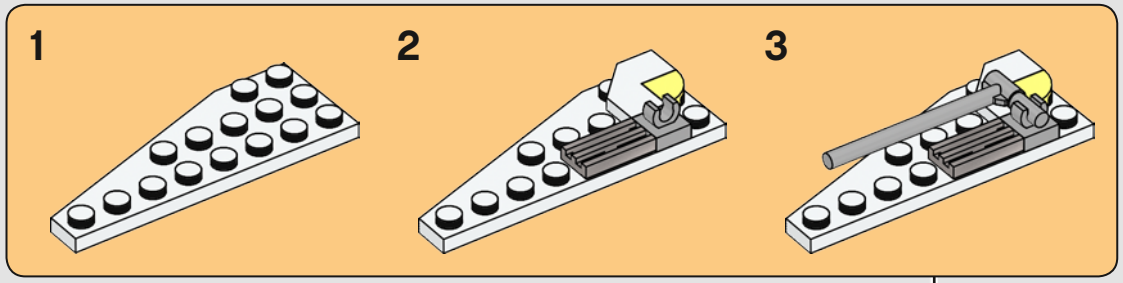

196

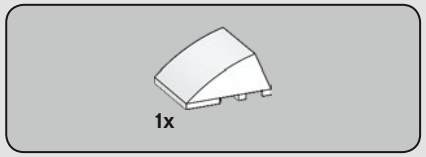

197

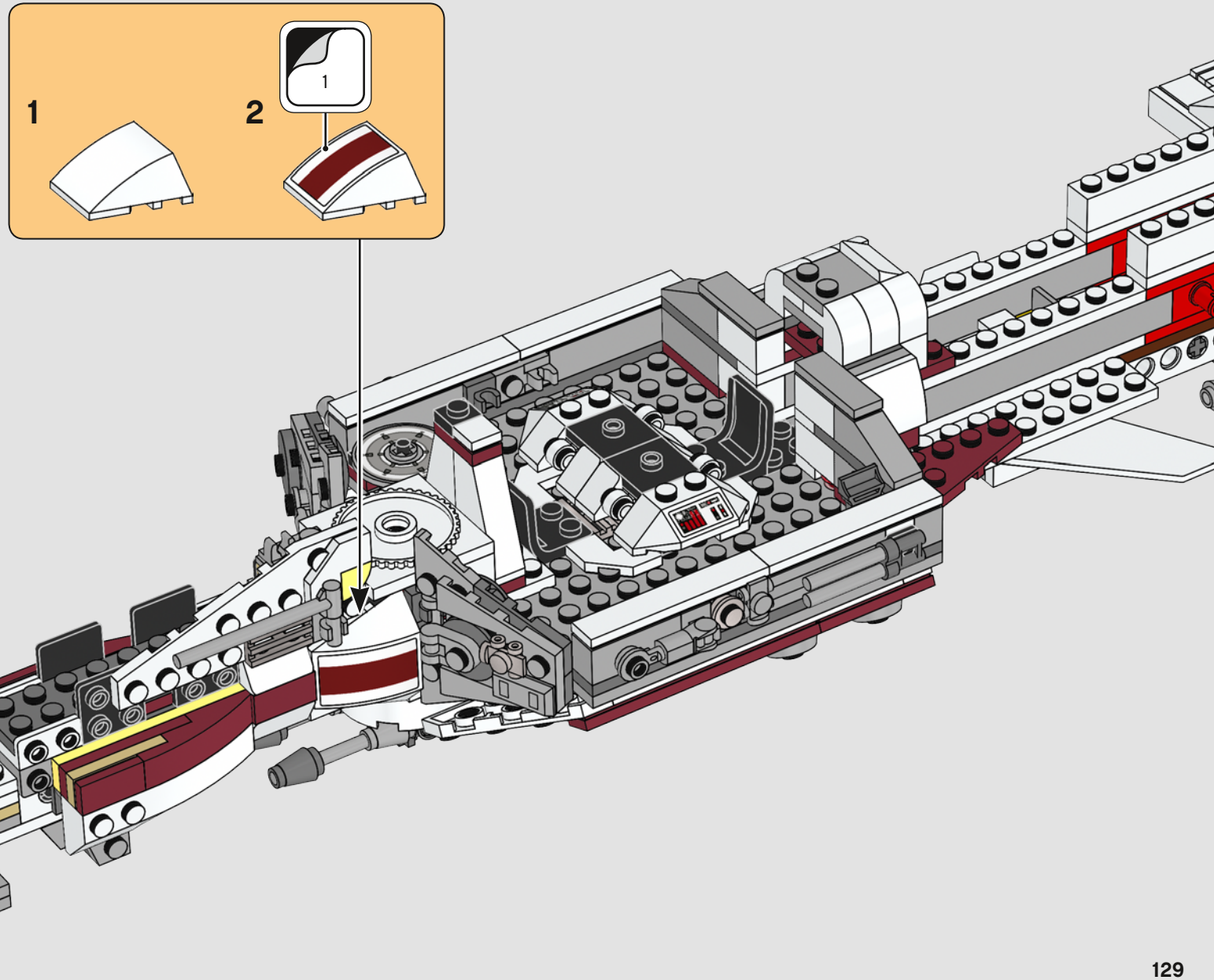

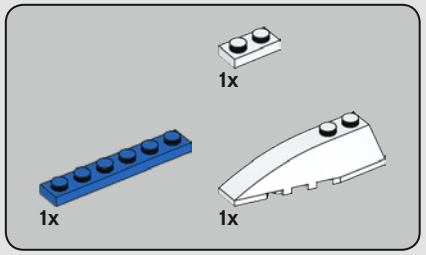

198

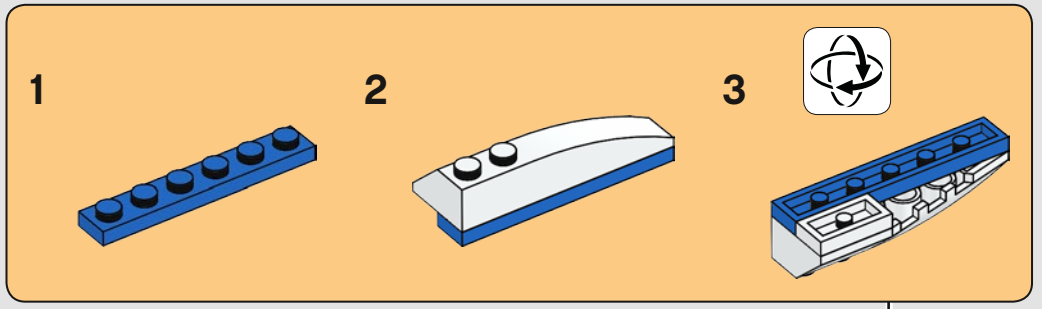

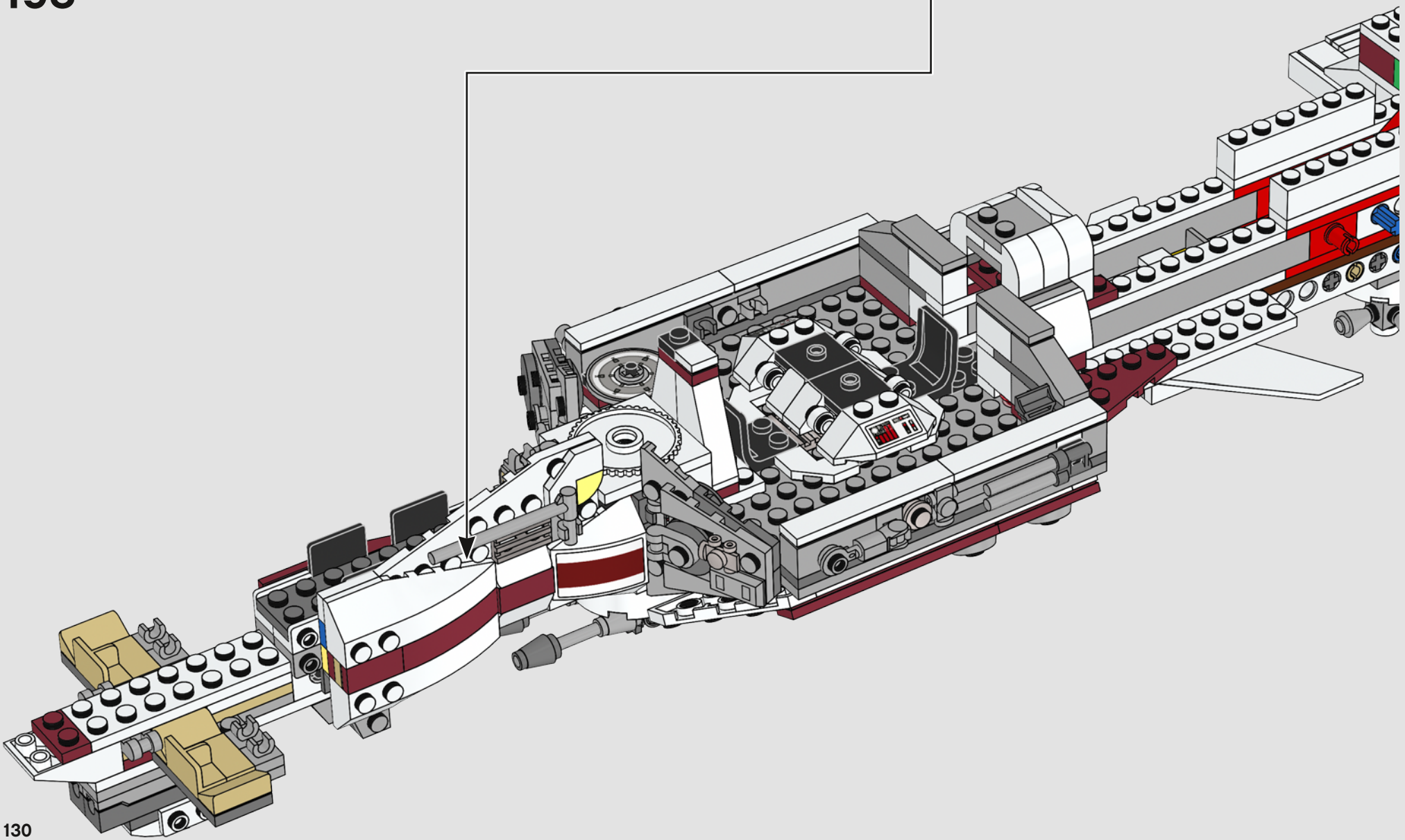

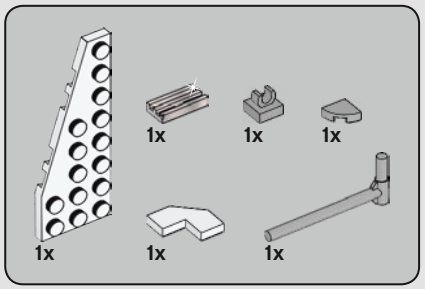

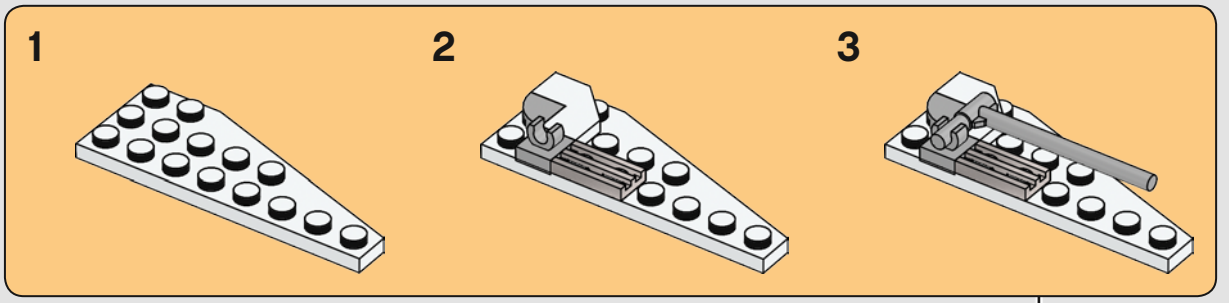

199

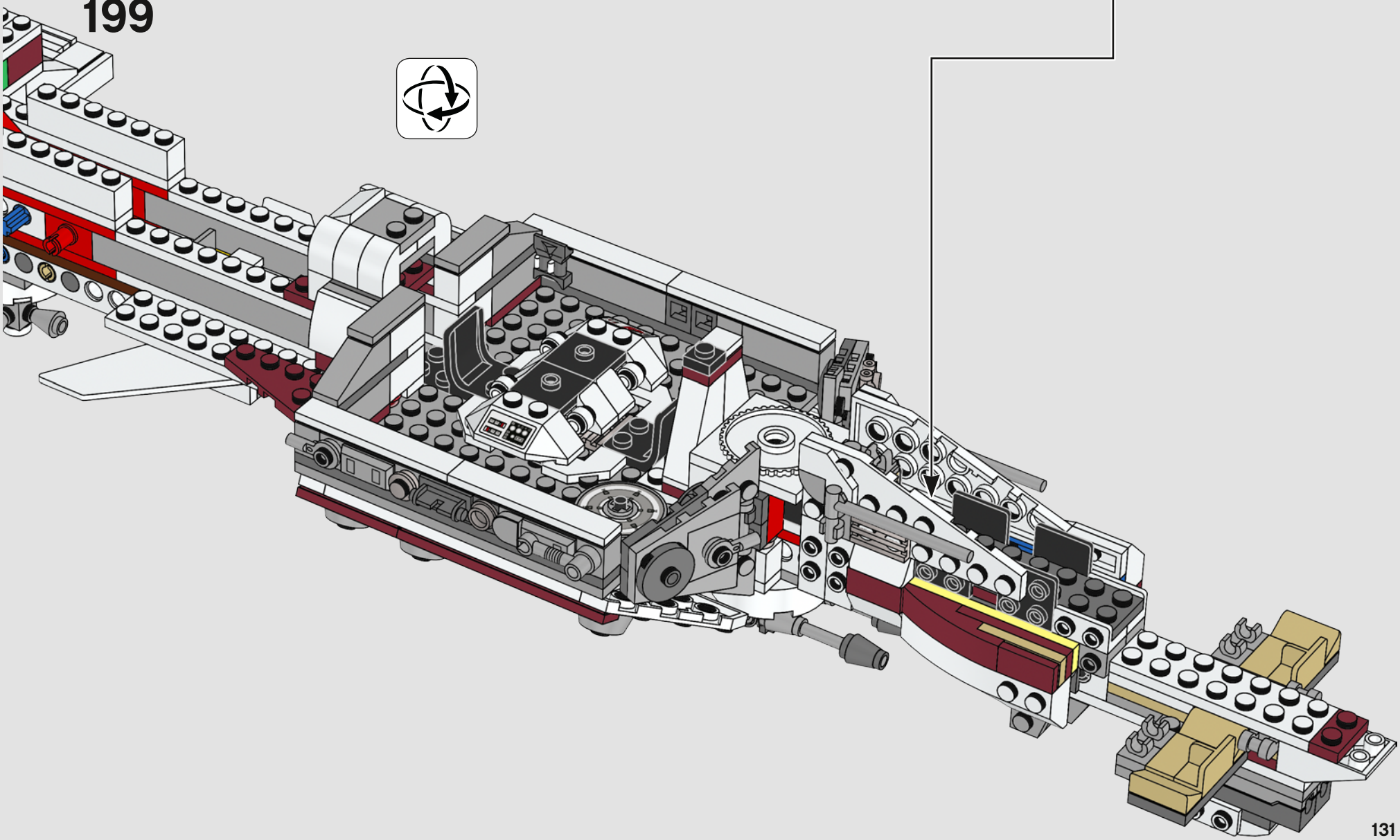

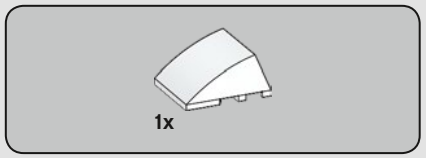

200

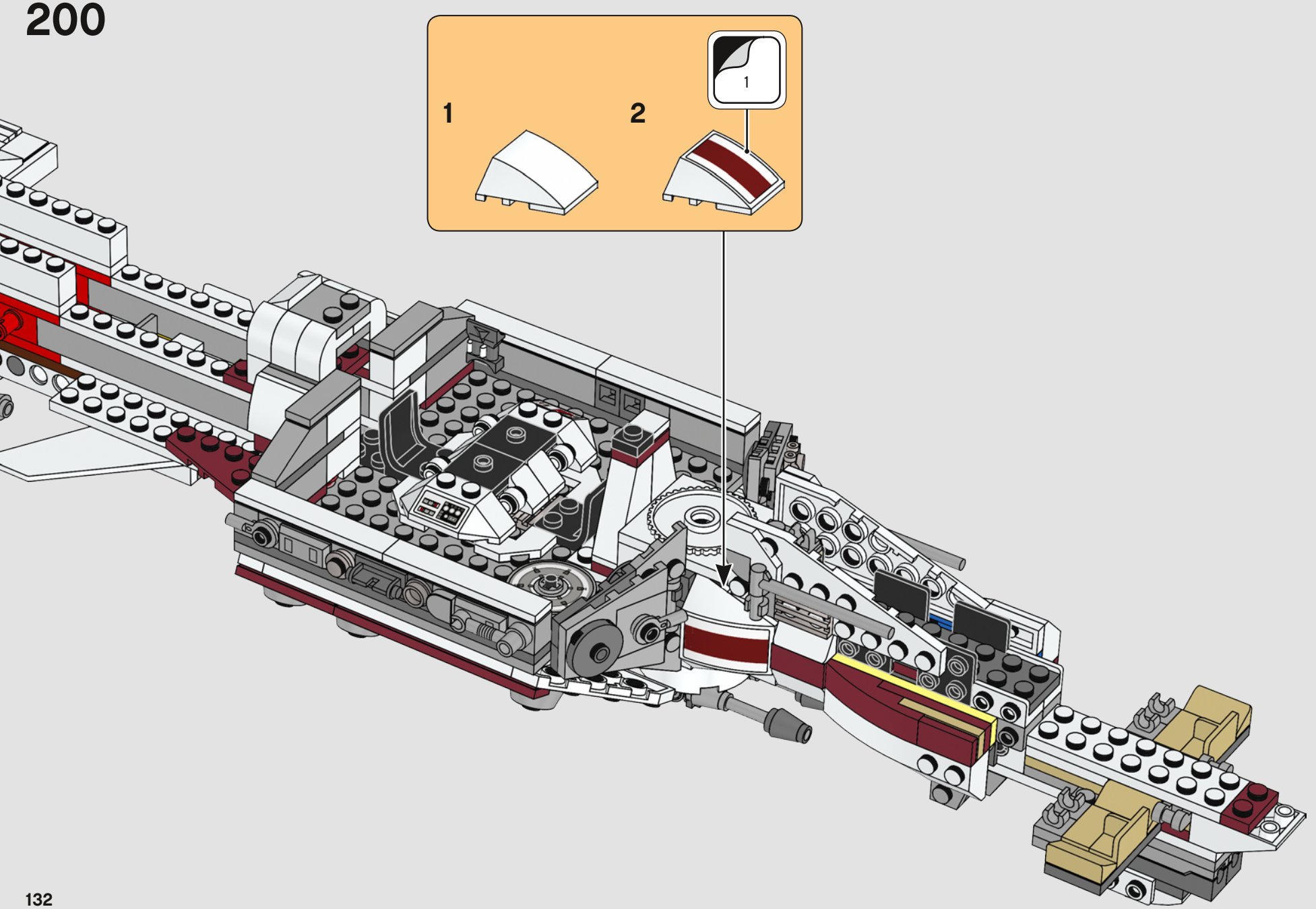

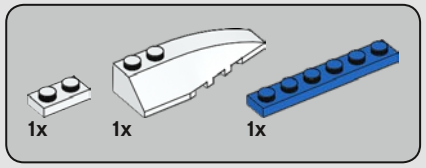

201

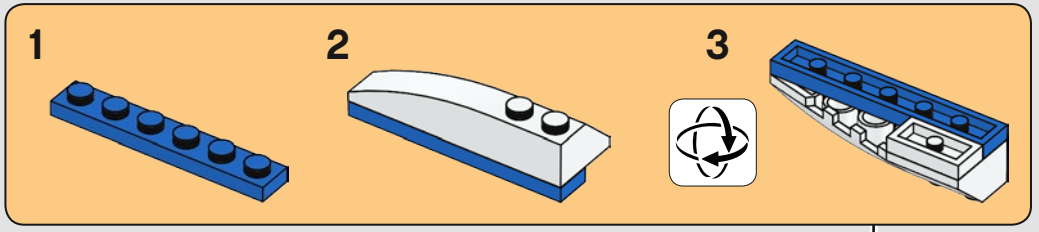

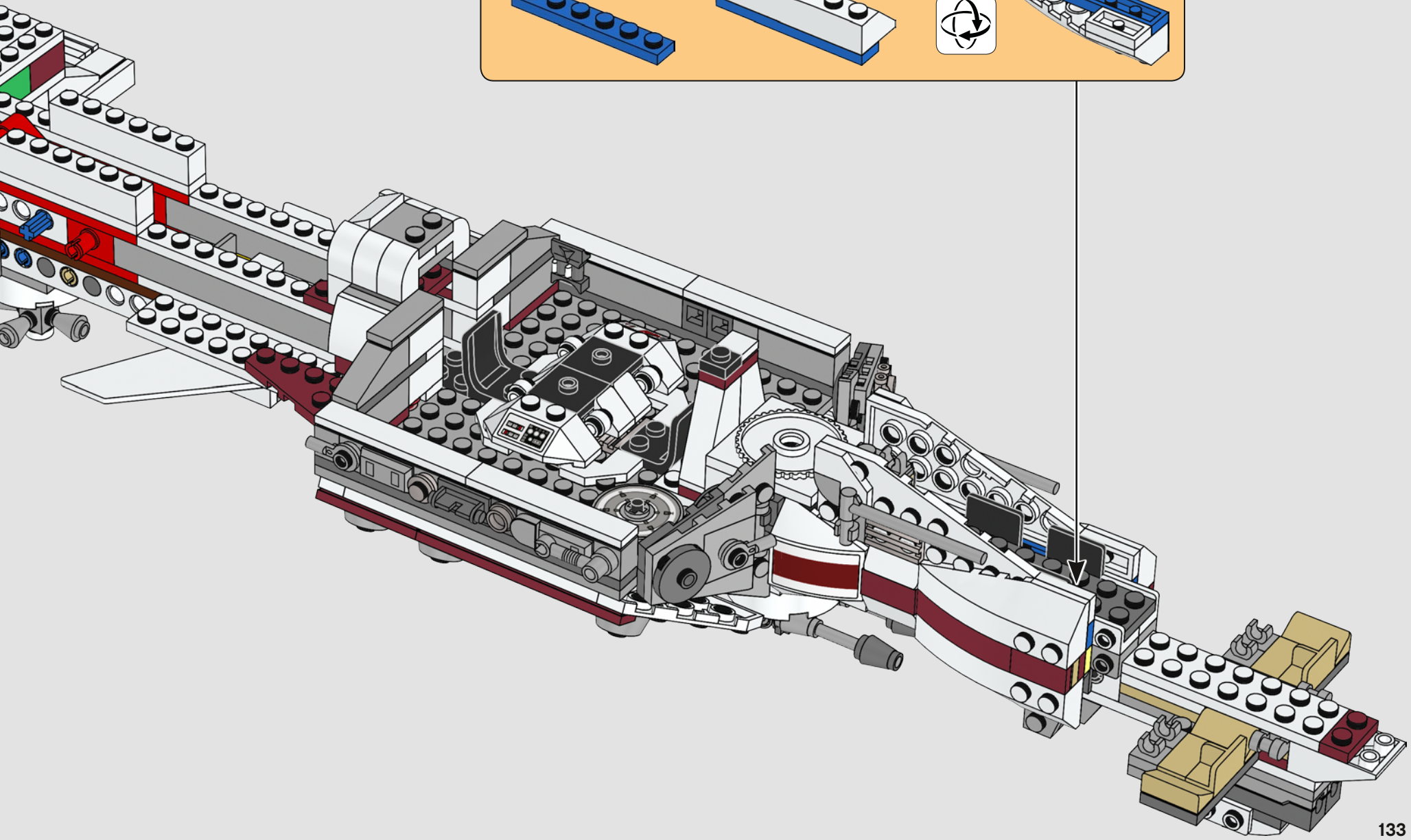

202

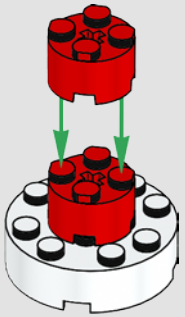

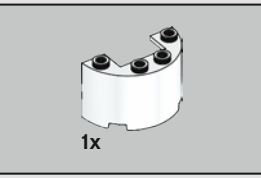

203

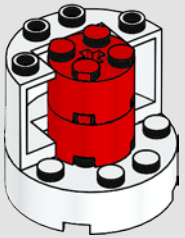

204

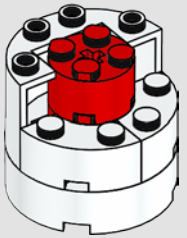

205

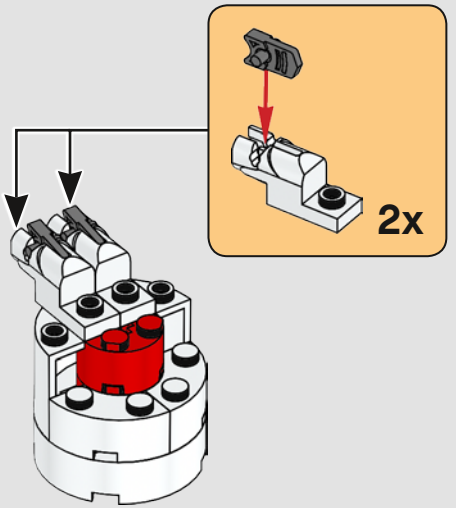

206

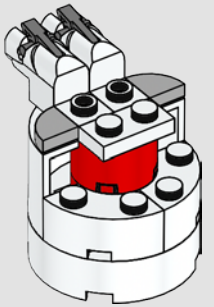

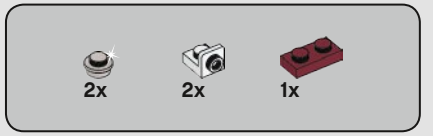

207

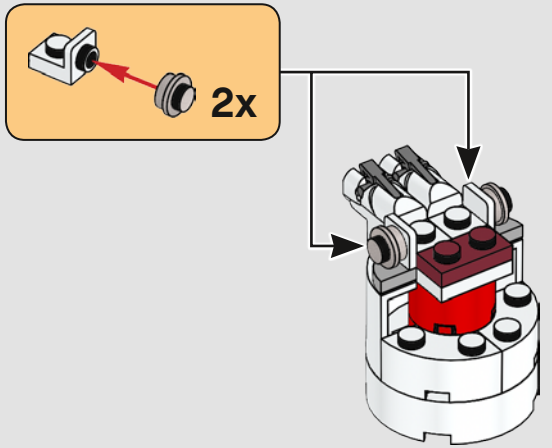

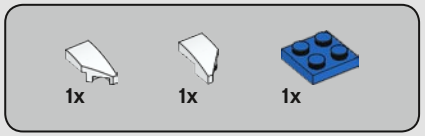

208

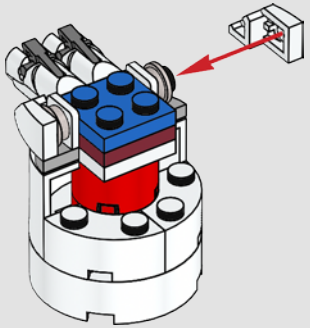

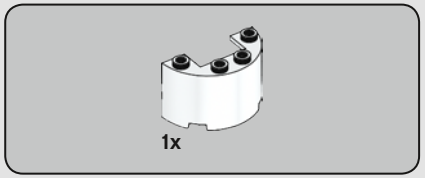

209

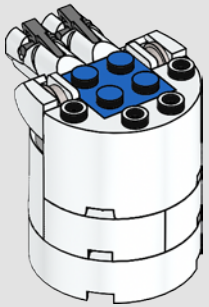

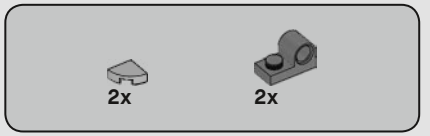

210

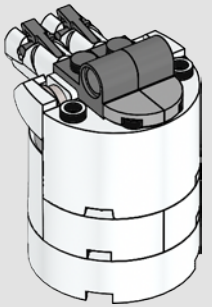

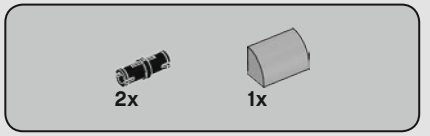

211

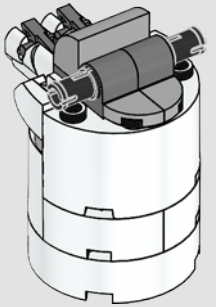

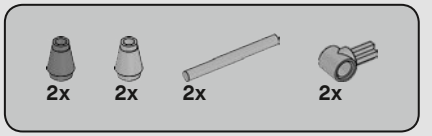

212

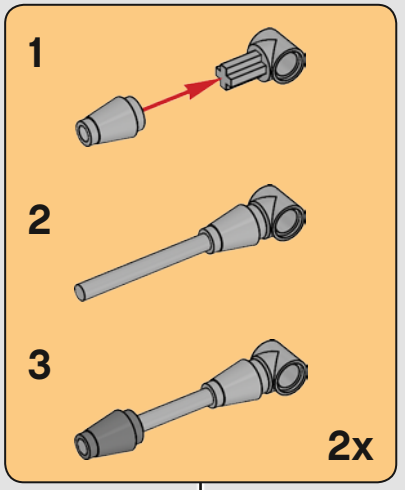

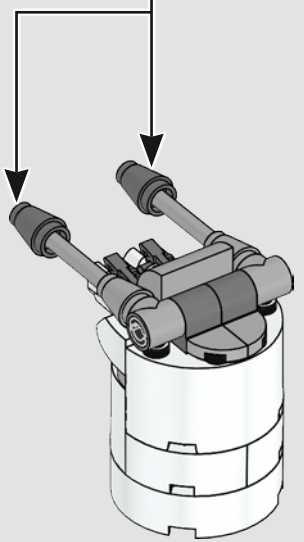

213

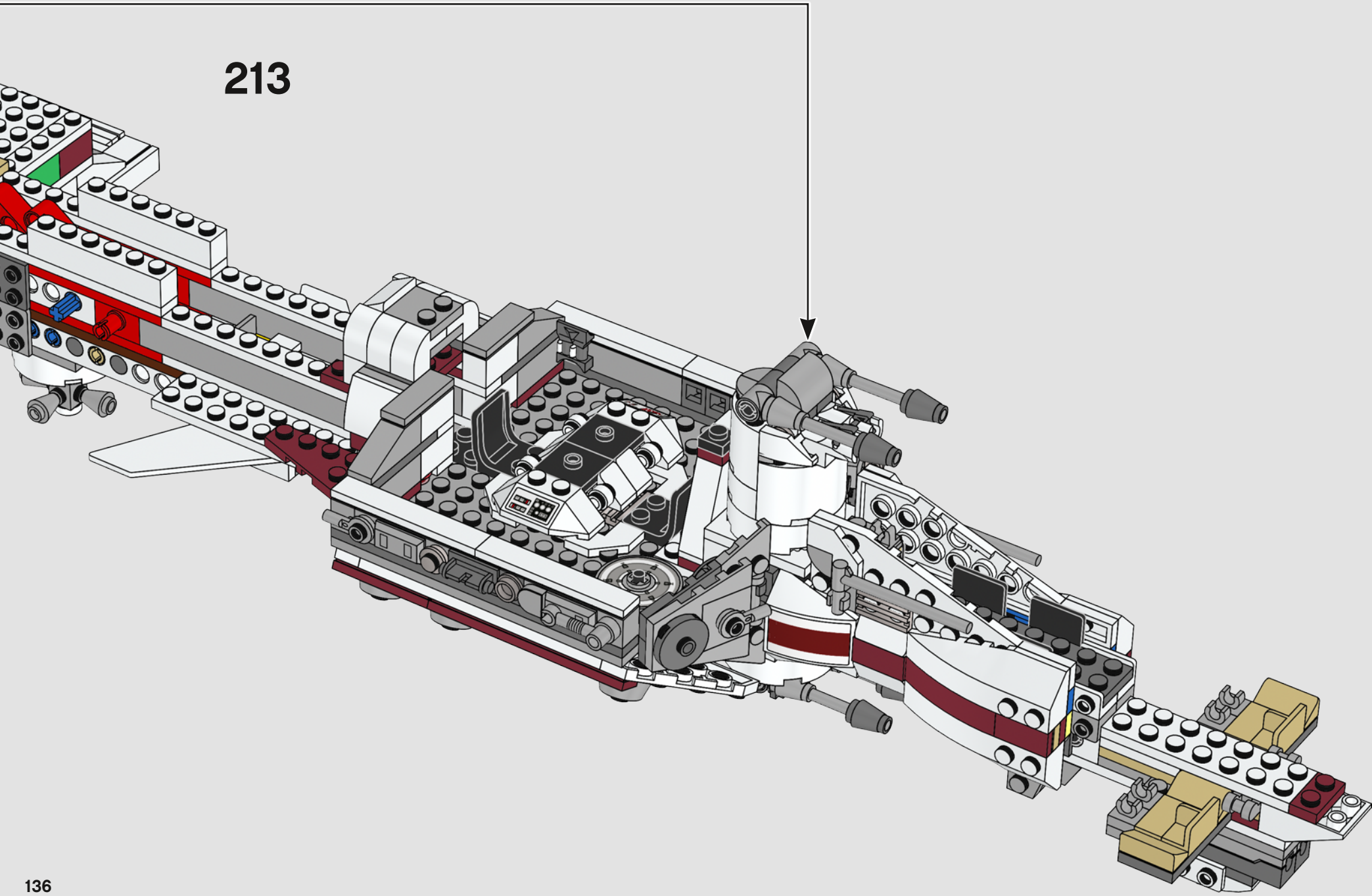

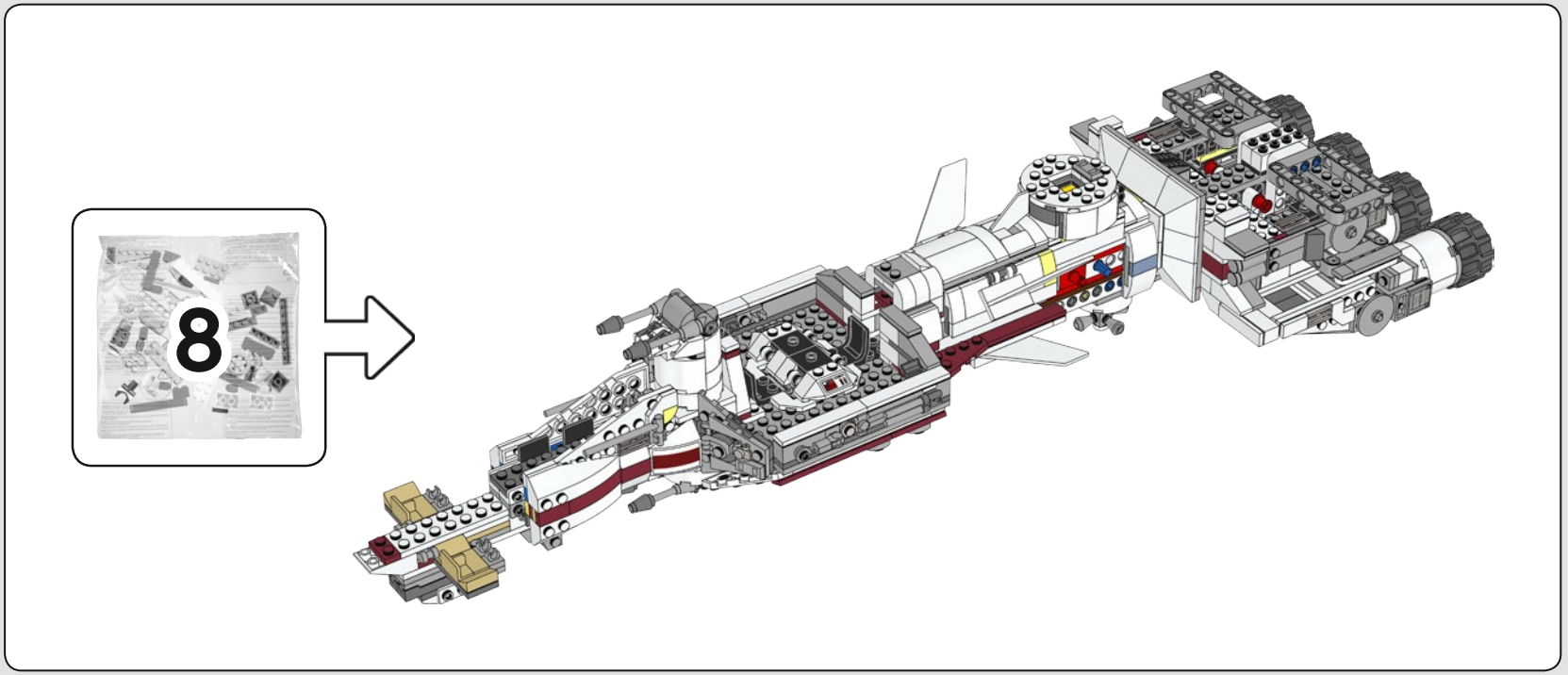
8

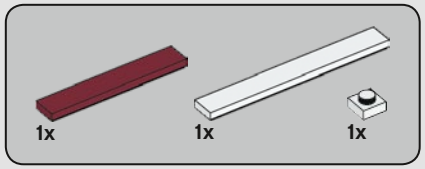

214

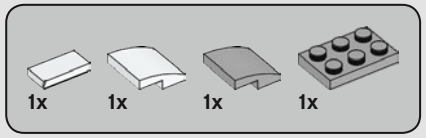

215

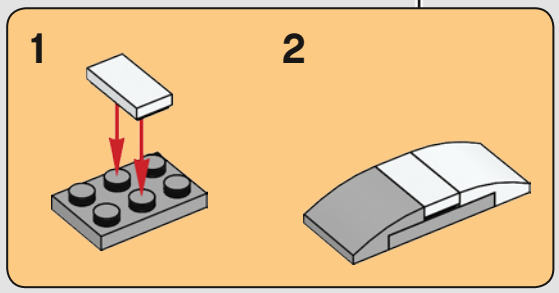

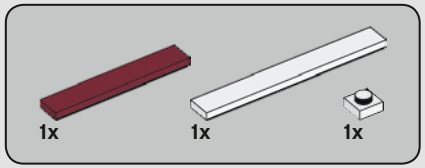

216

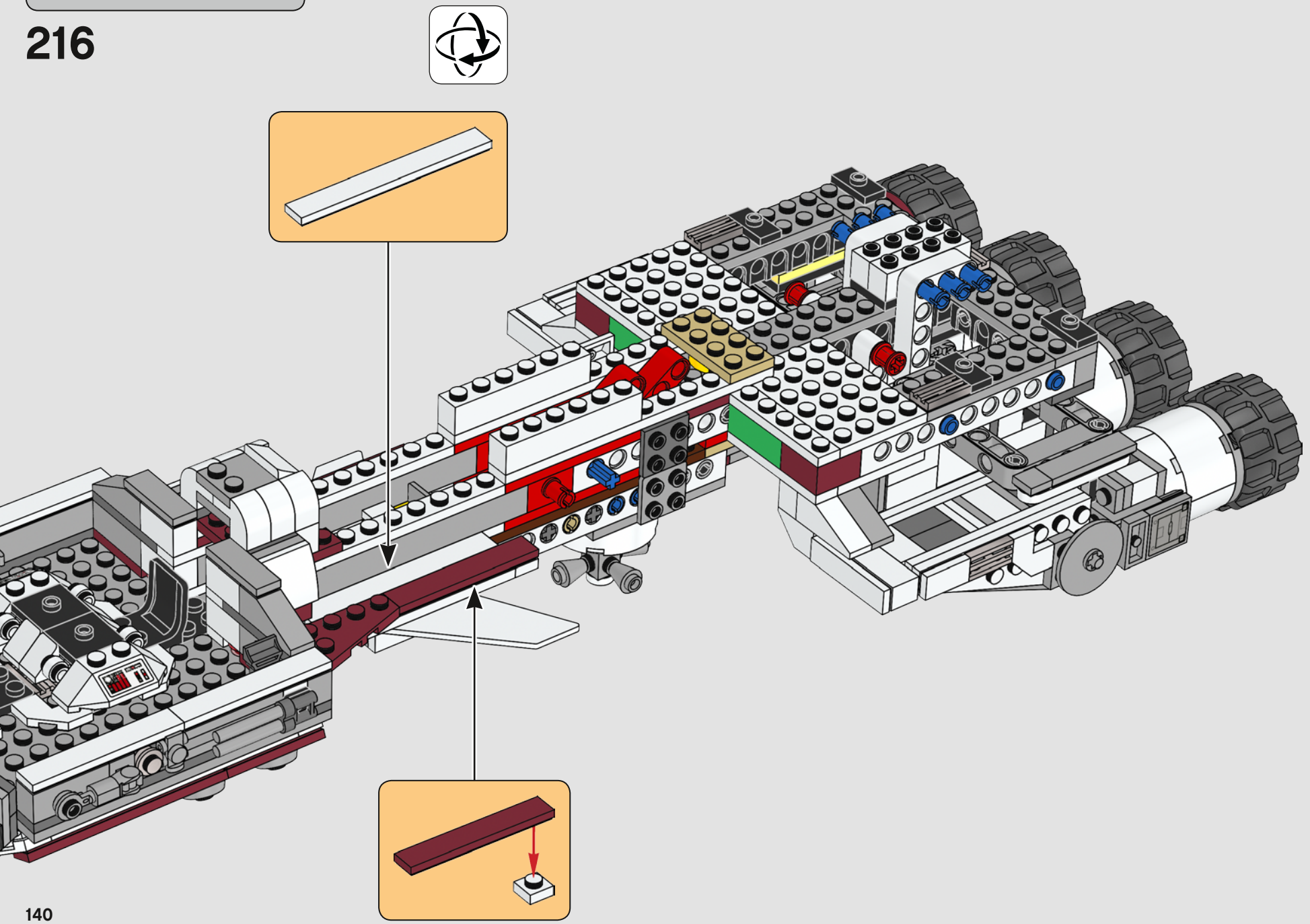

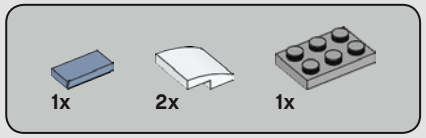

217

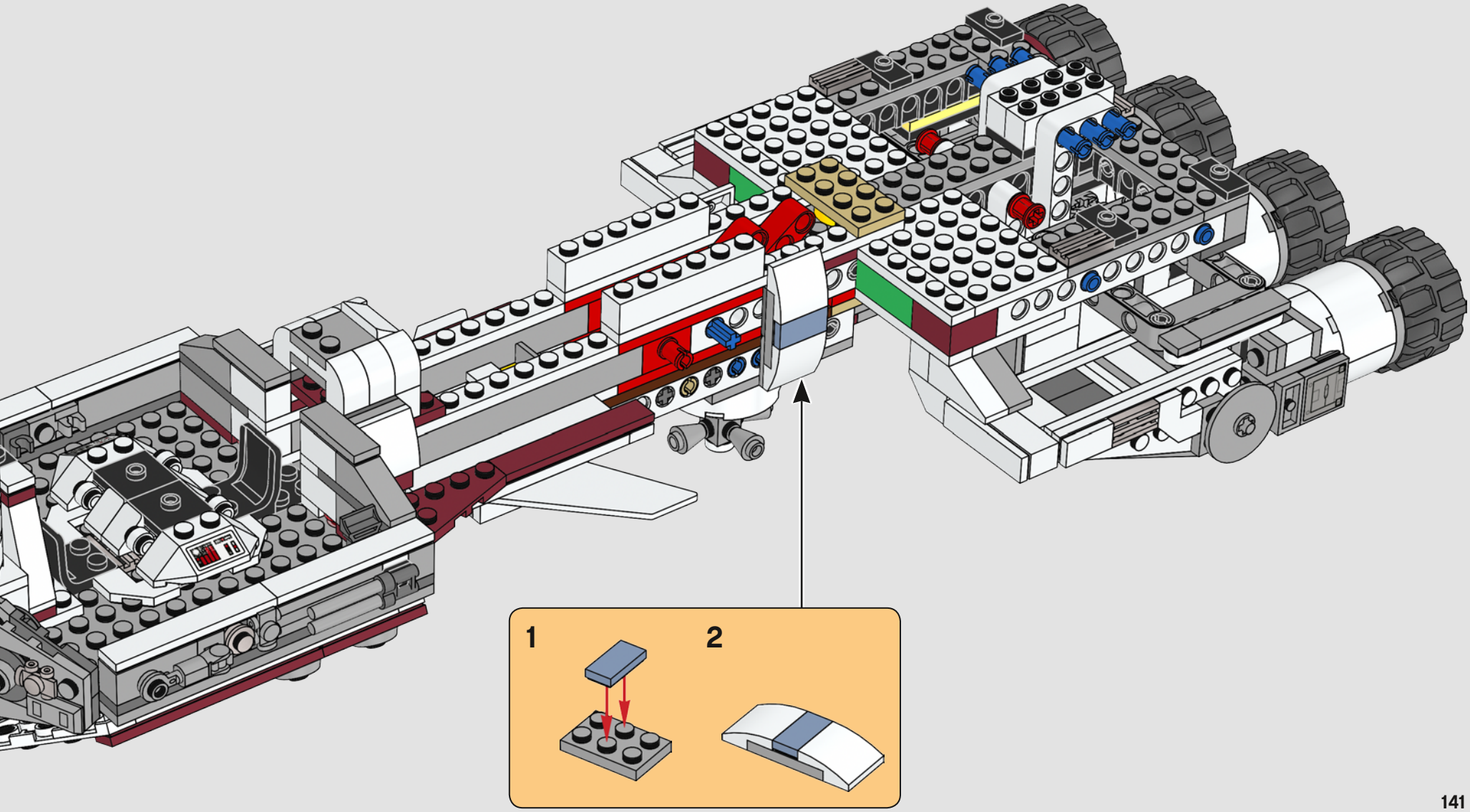

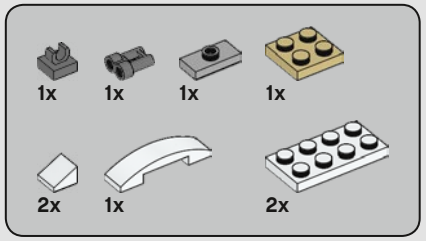

218

1

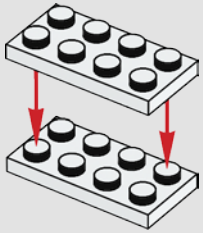

2

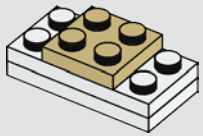

3

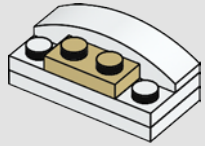

4

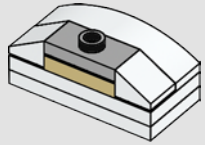

5

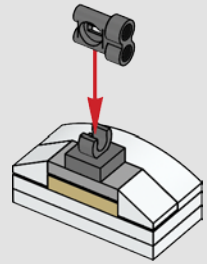

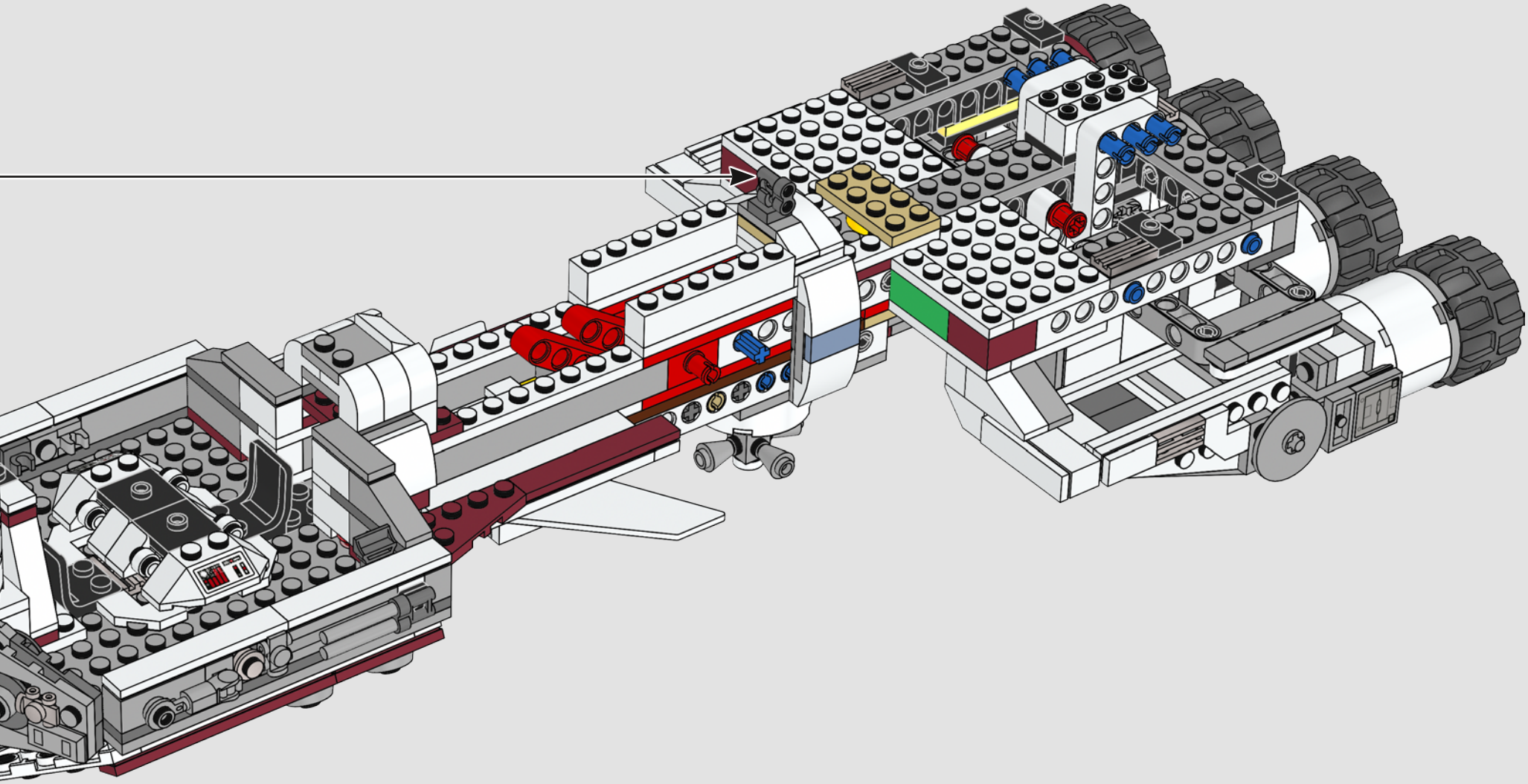

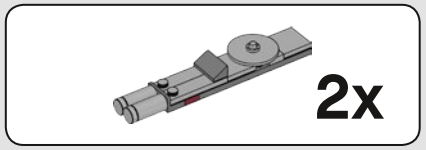

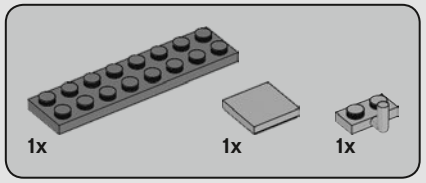

219

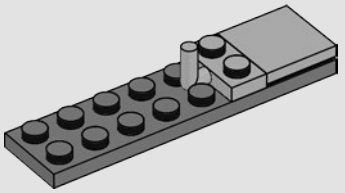

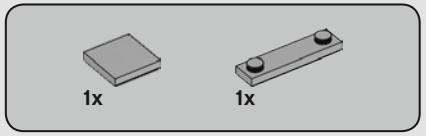

220

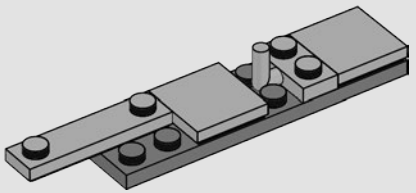

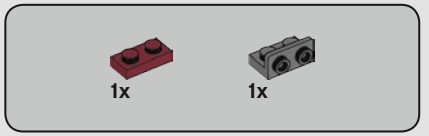

221

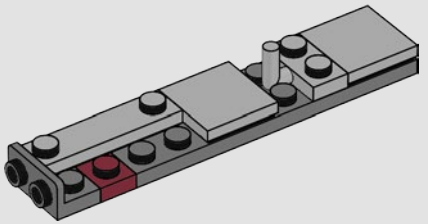

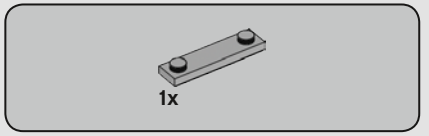

222

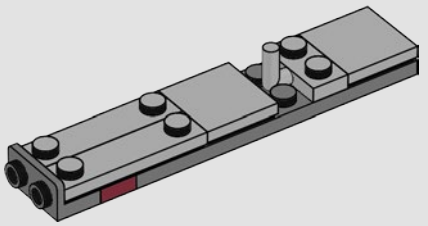

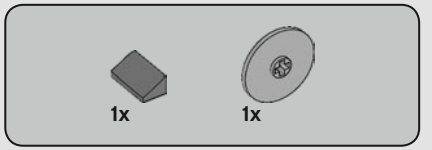

223

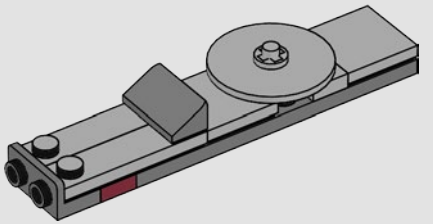

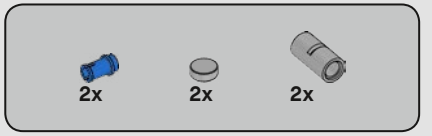

224

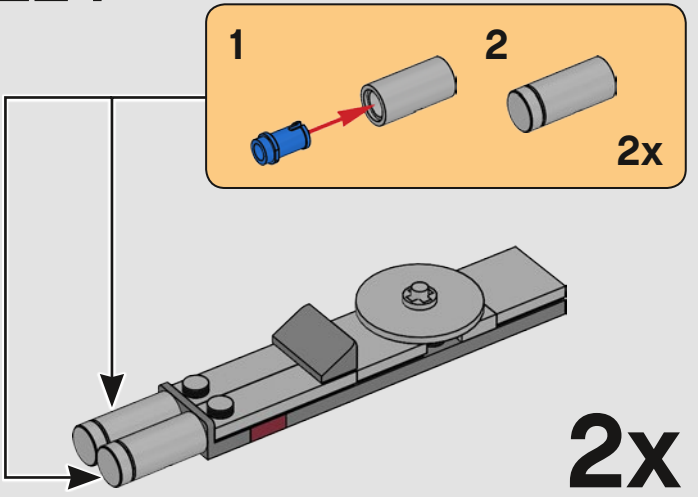

225

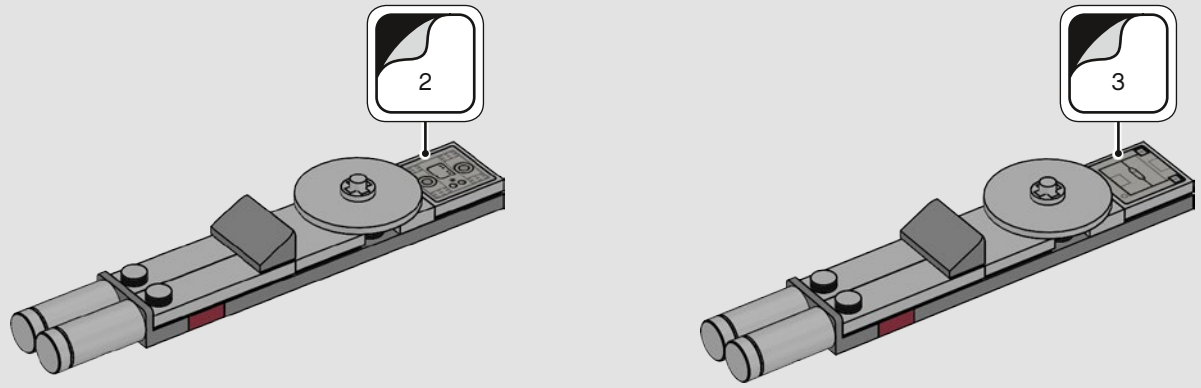

226

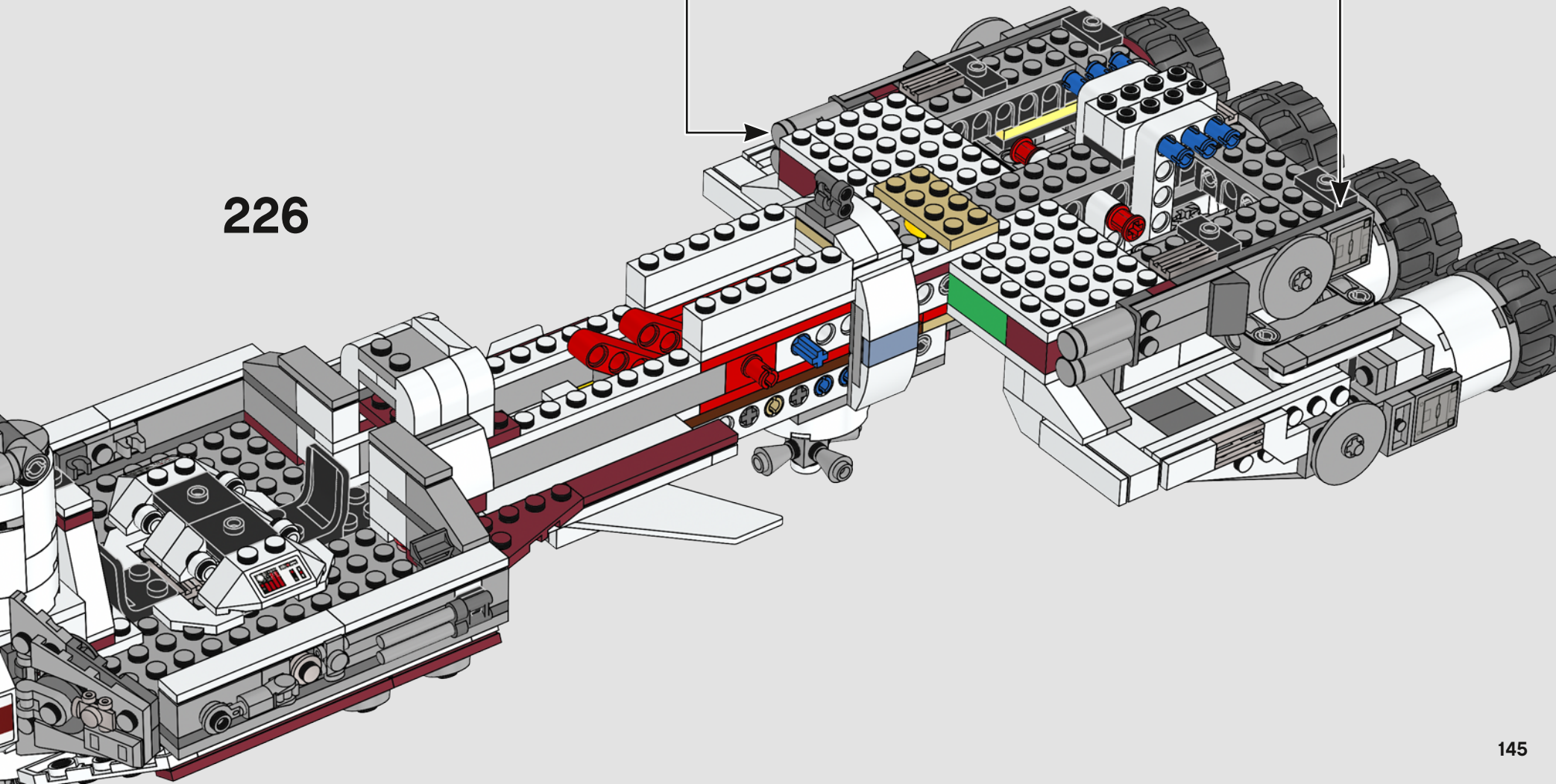

227

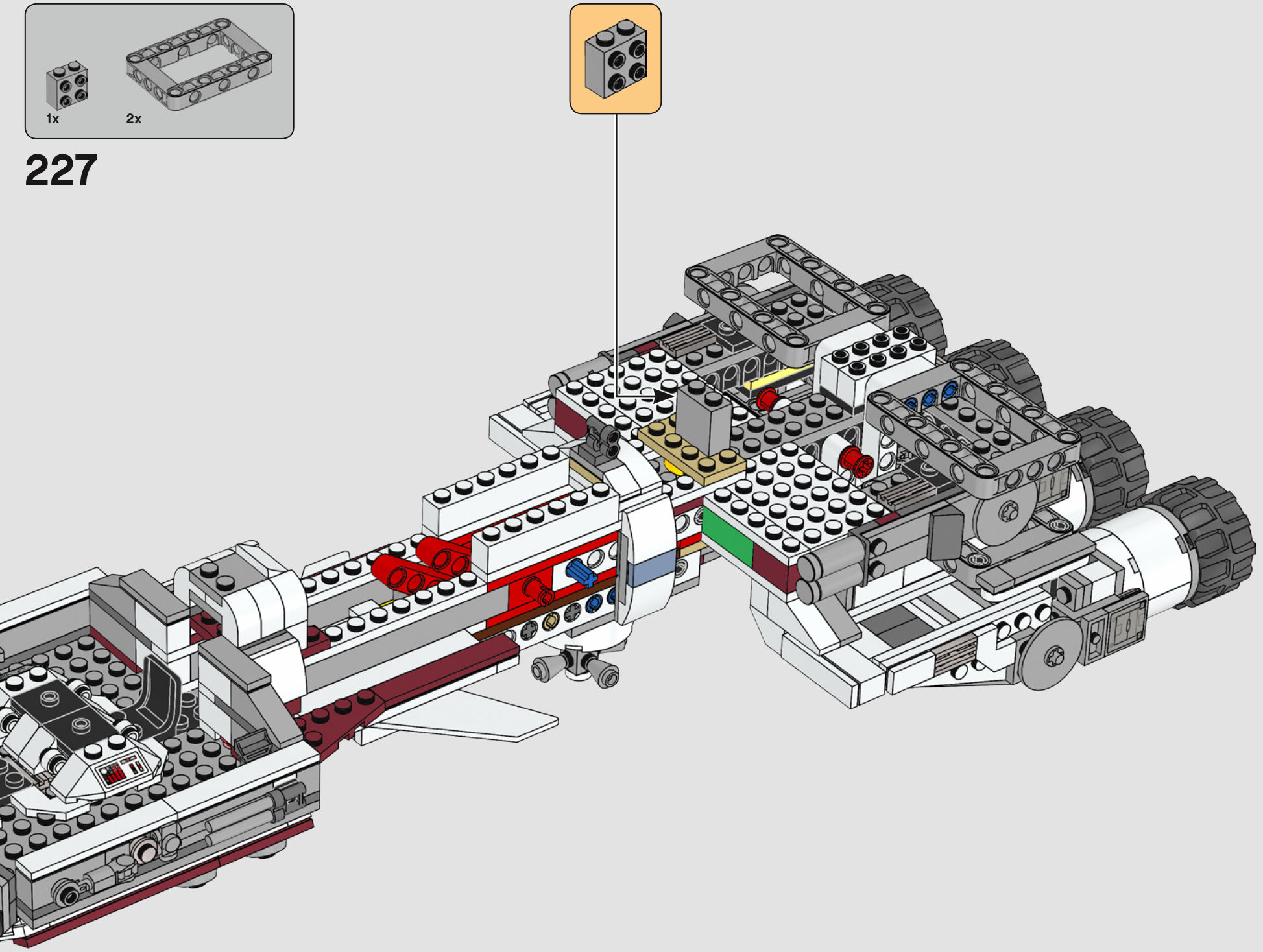

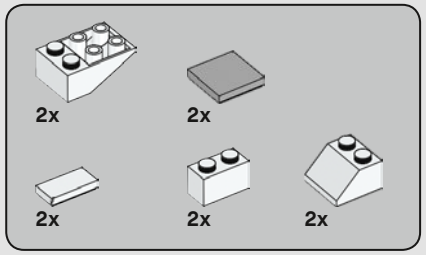

228

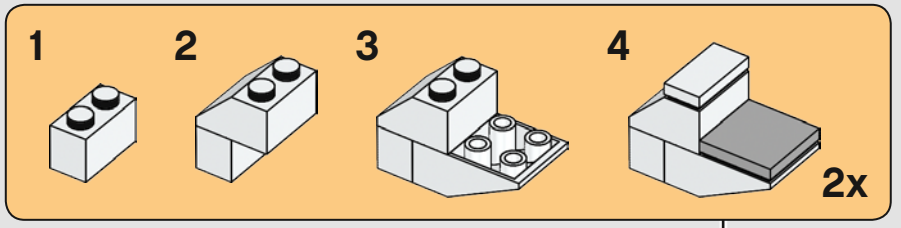

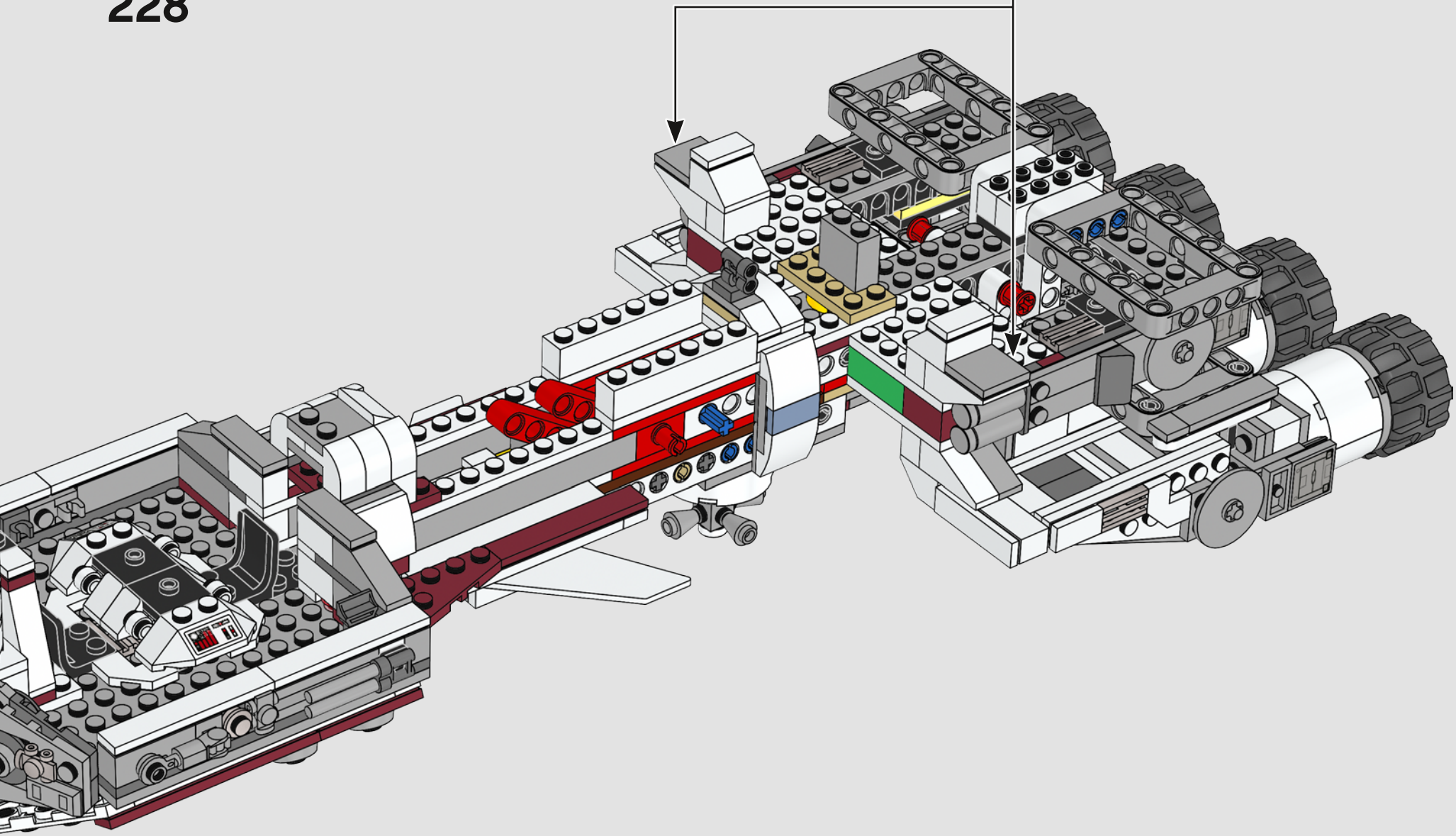

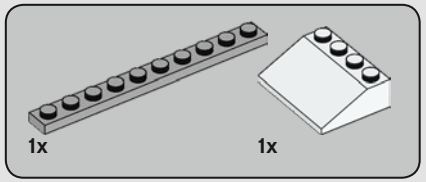

229

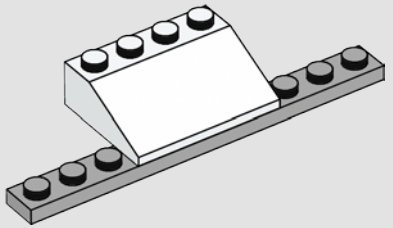

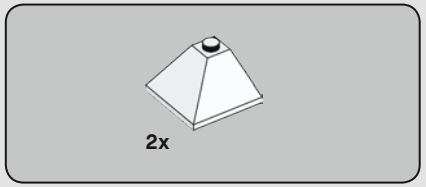

230

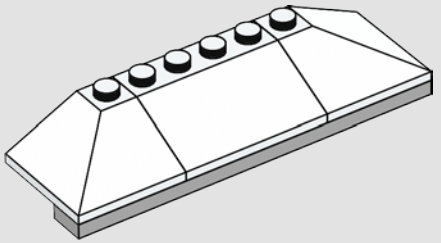

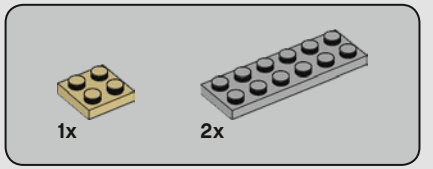

231

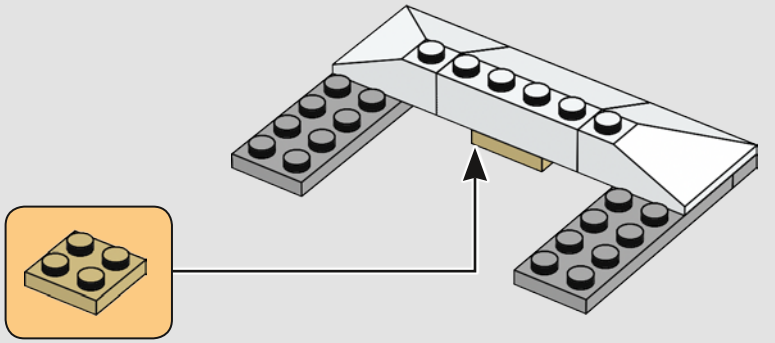

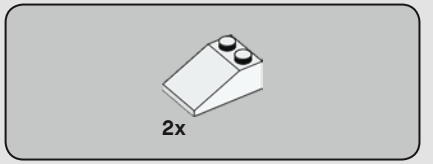

232

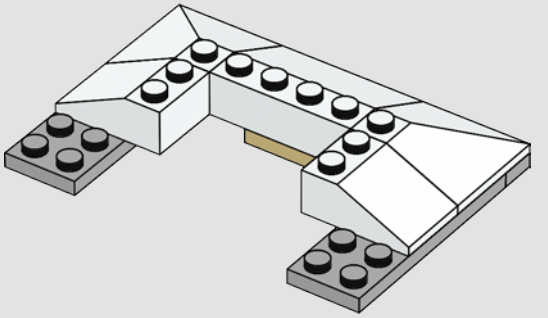

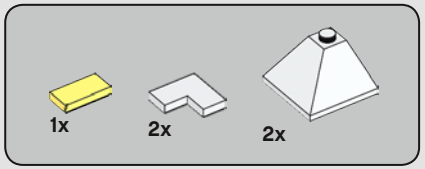

233

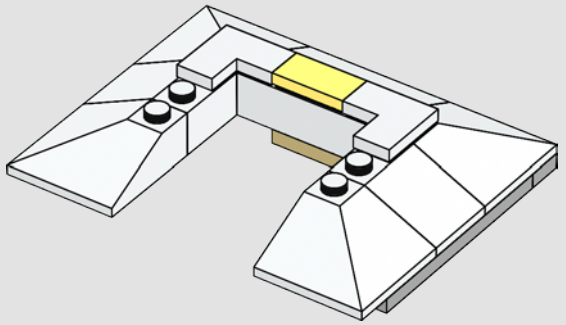

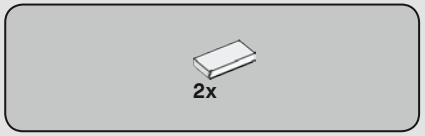

234

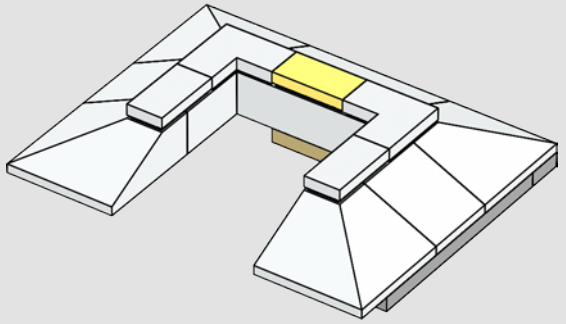

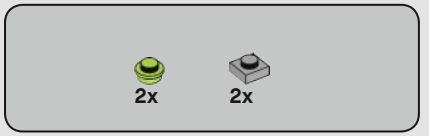

235

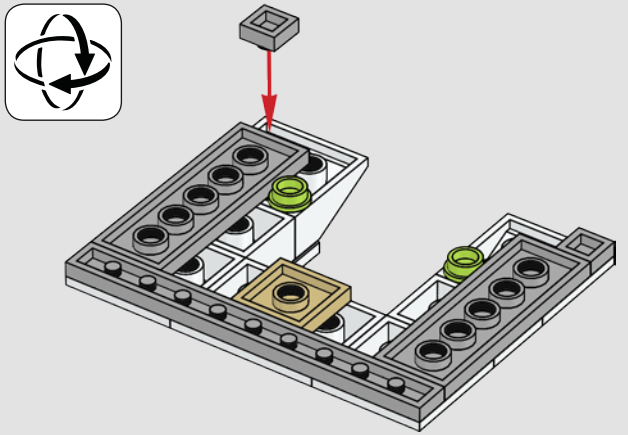

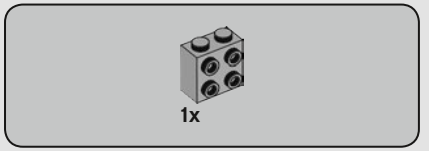

236

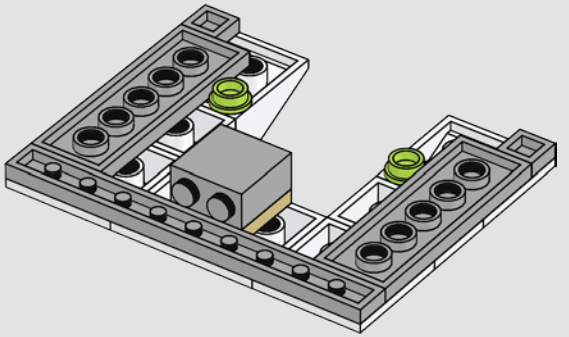

237

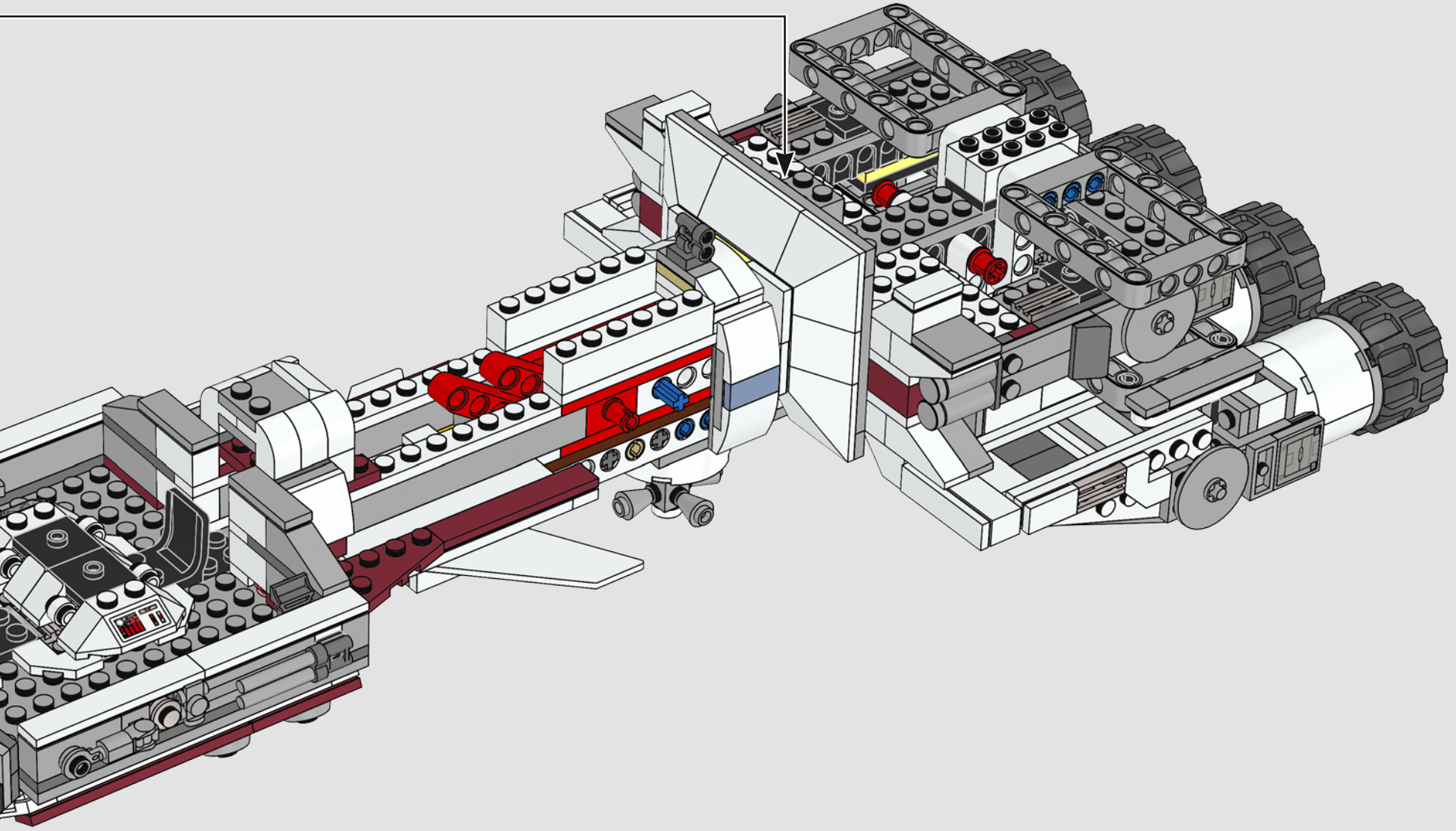

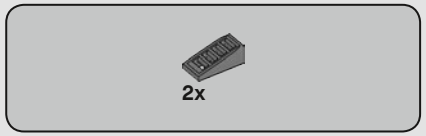

238

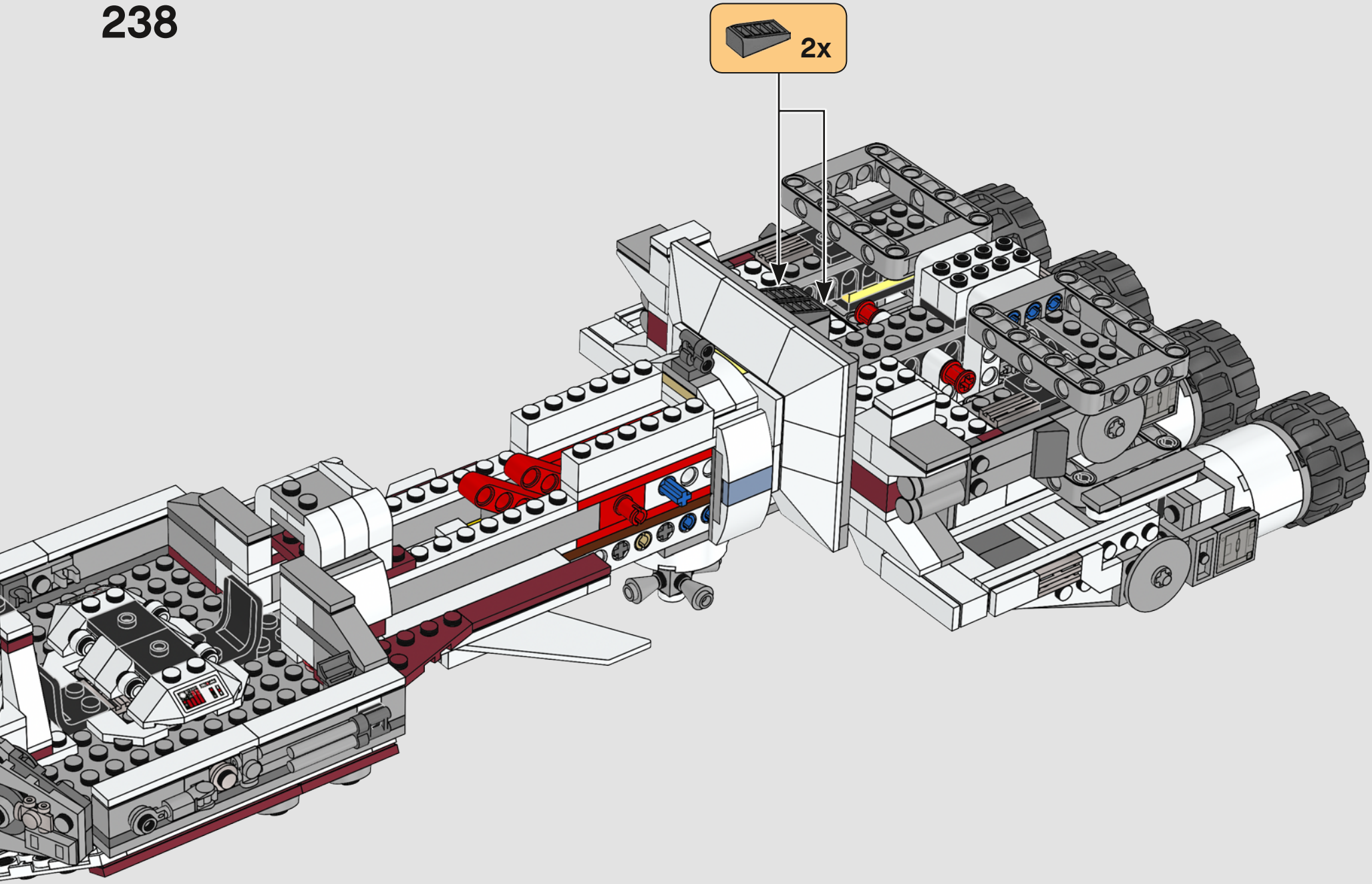

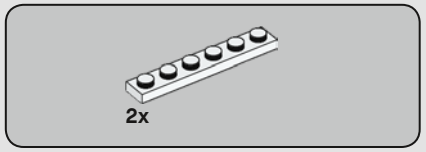

239

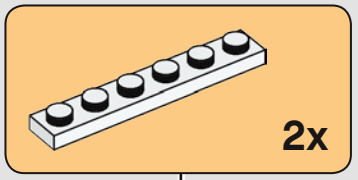

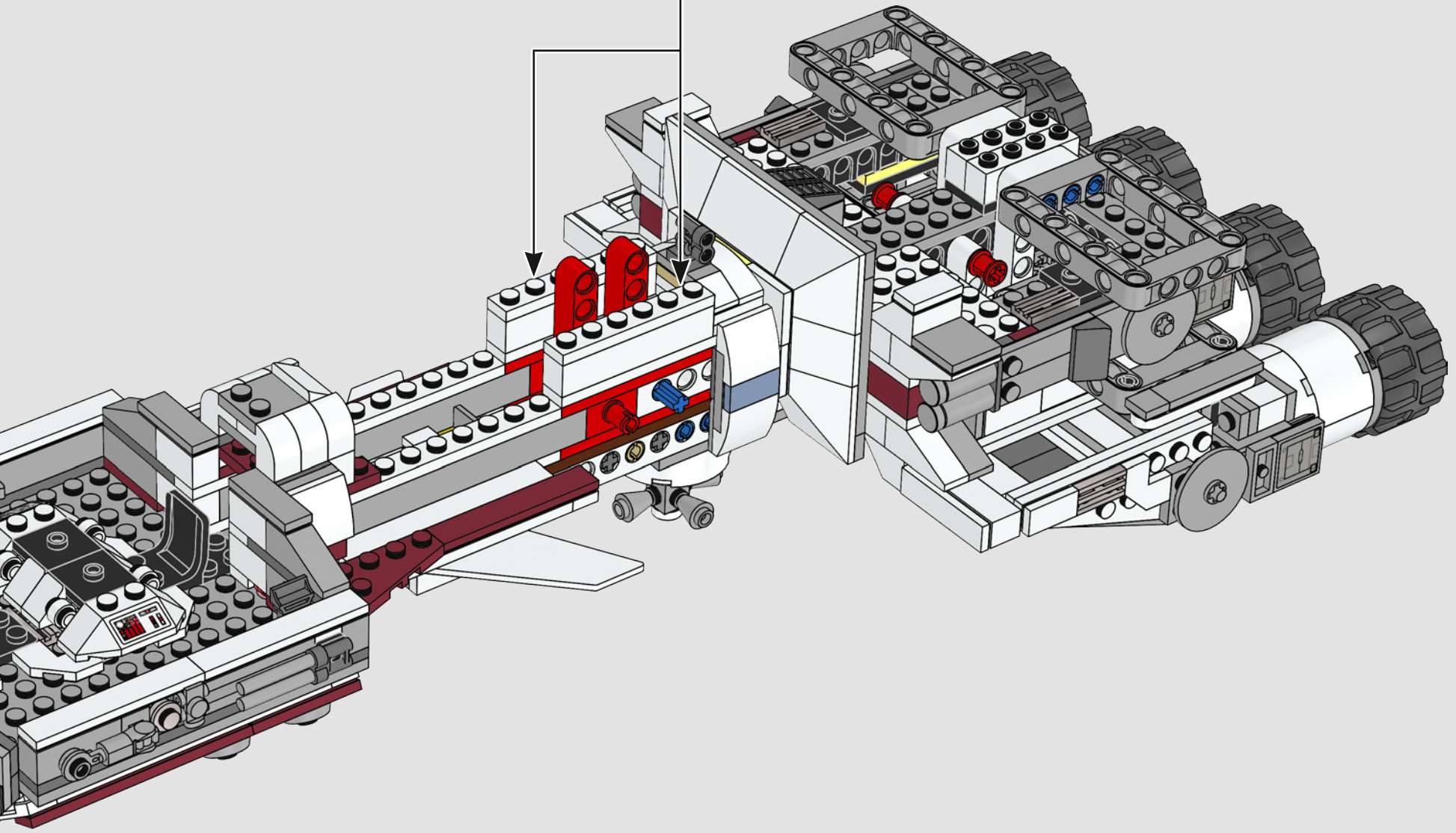

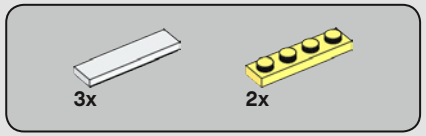

240

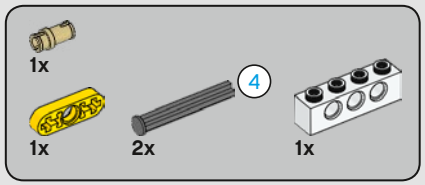

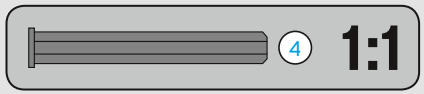

241

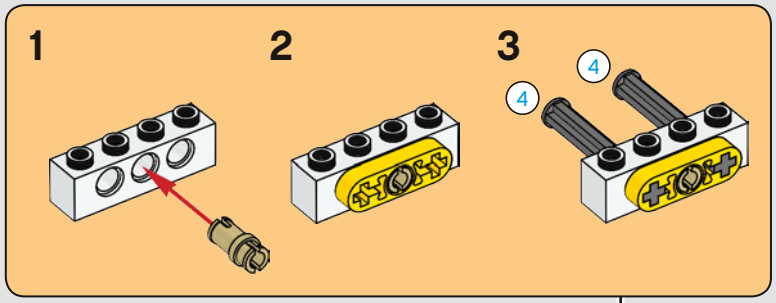

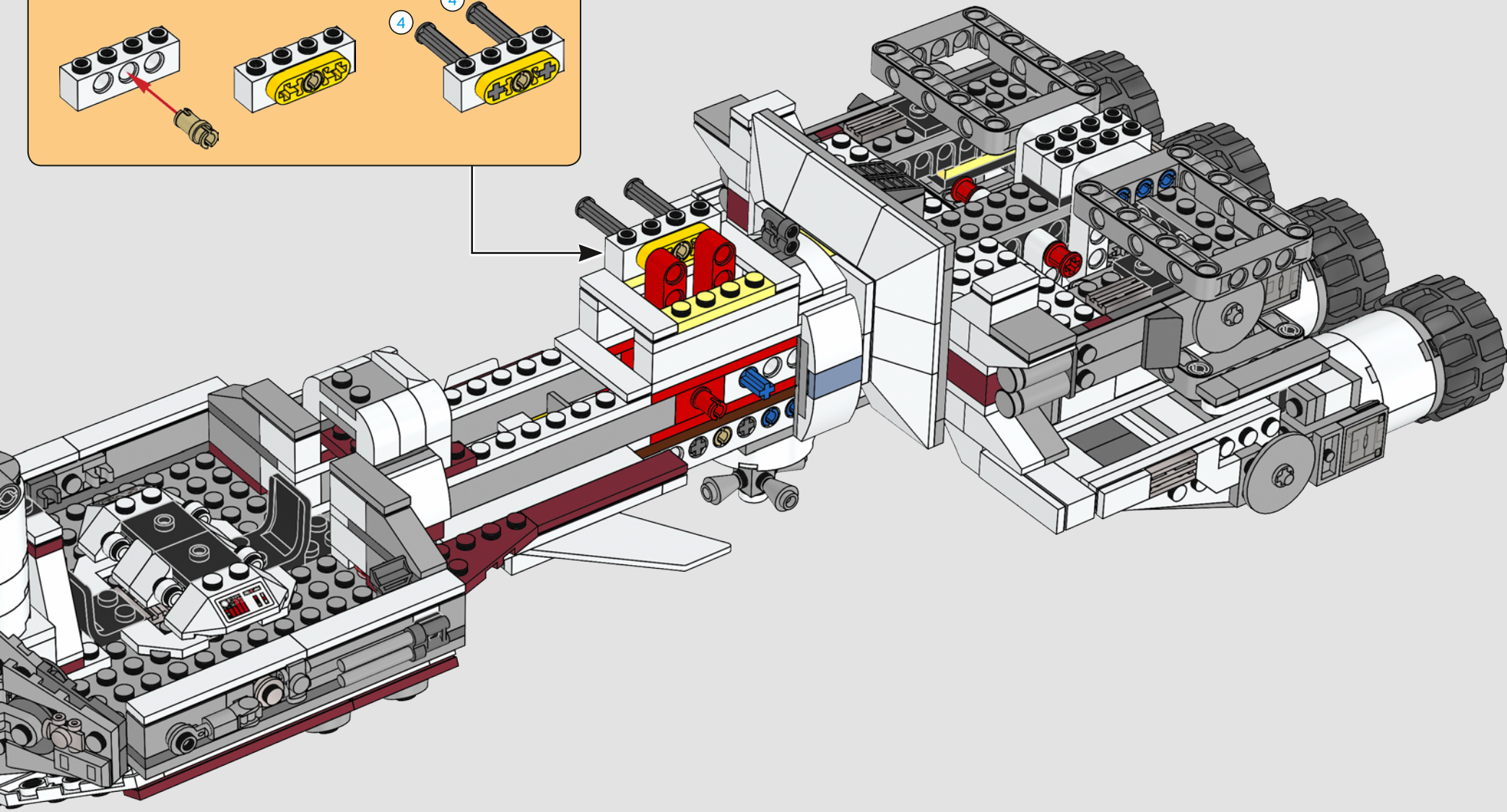

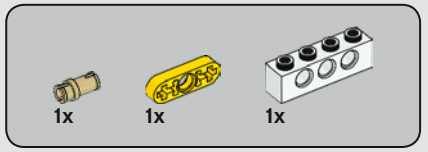

242

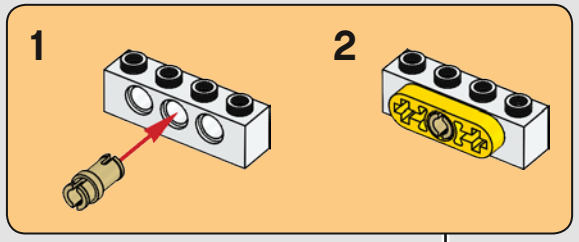

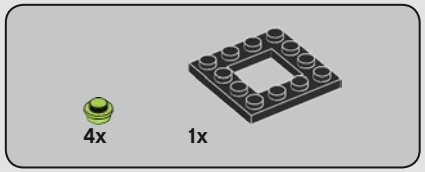

243

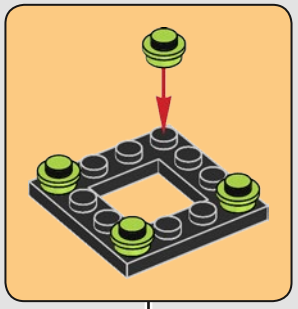

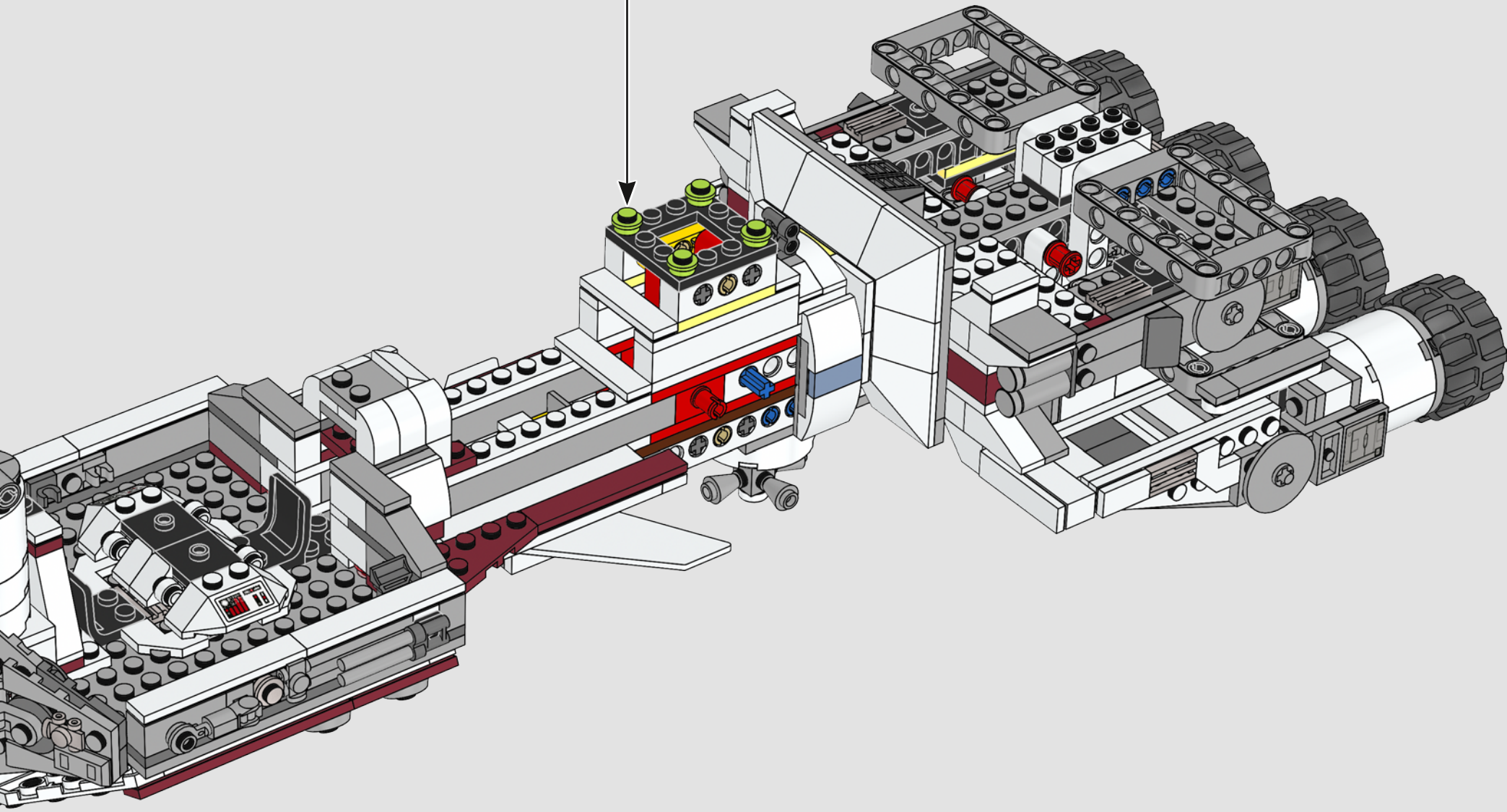

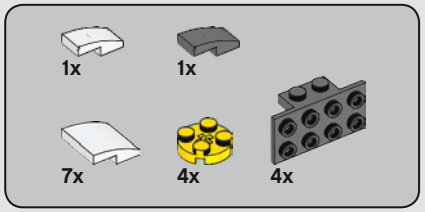

244

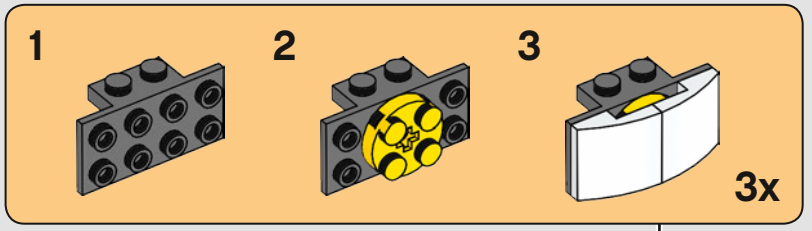

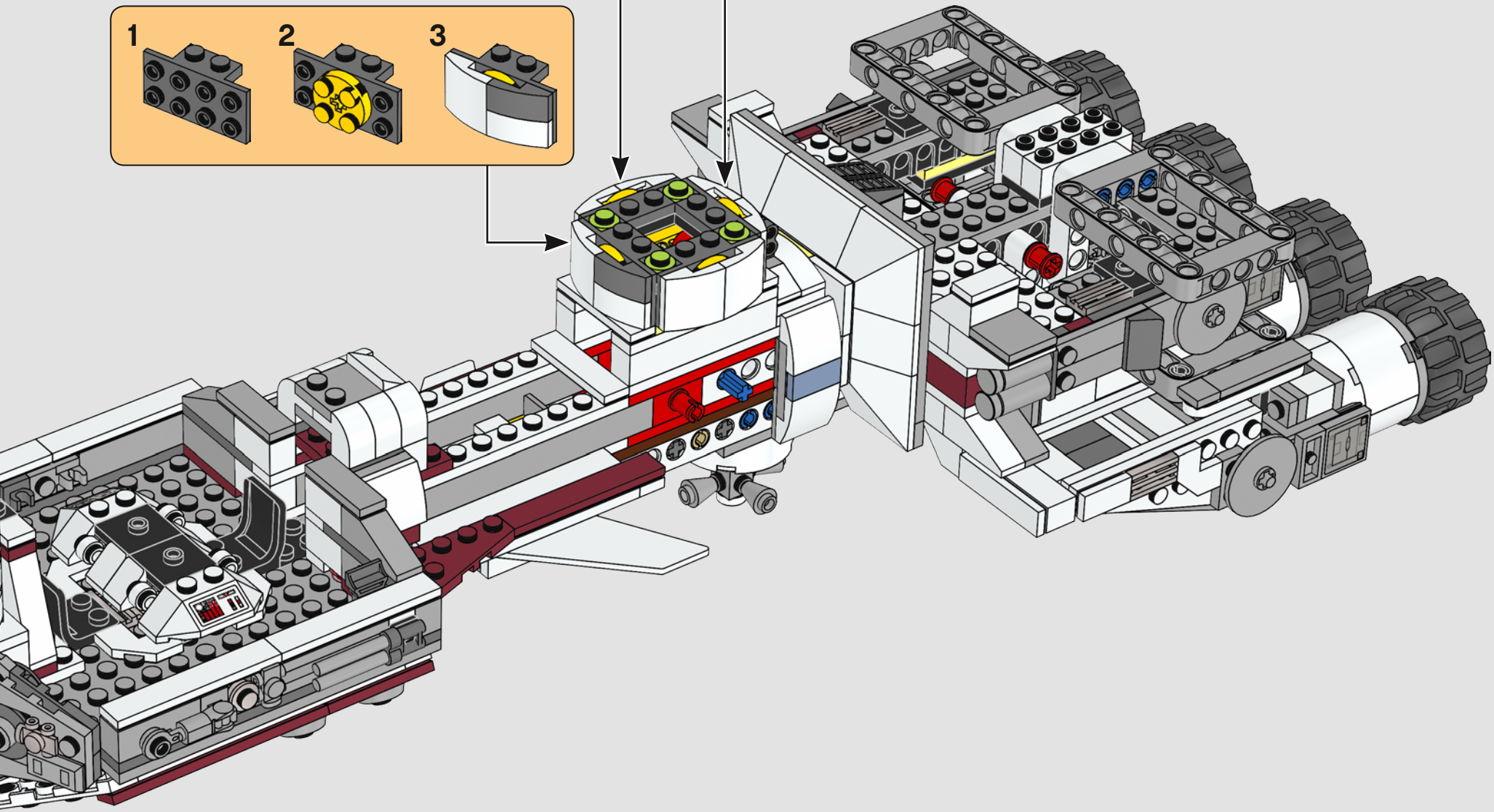

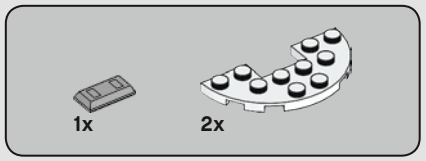

245

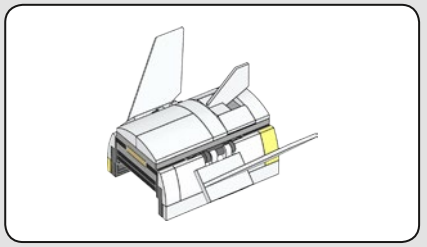

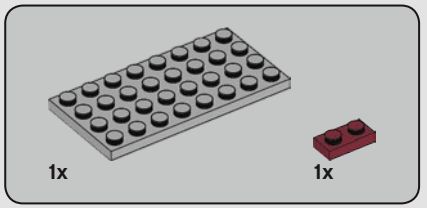

246

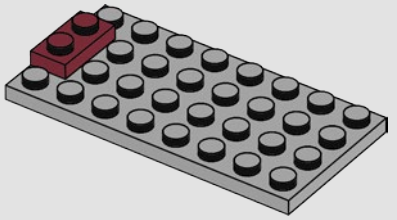

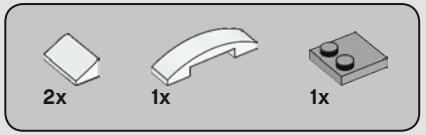

247

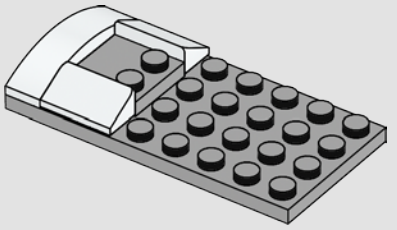

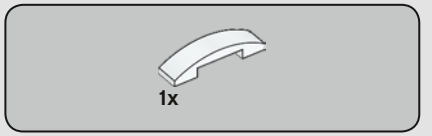

248

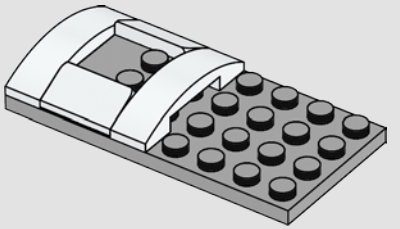

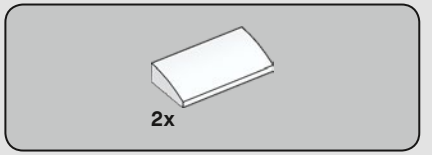

249

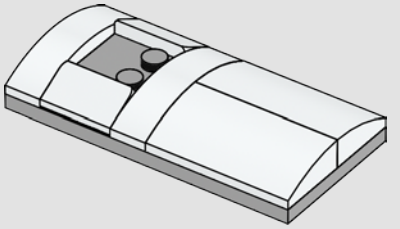

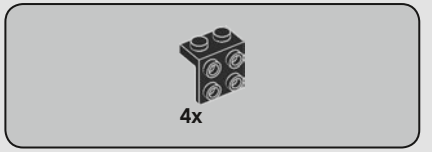

250

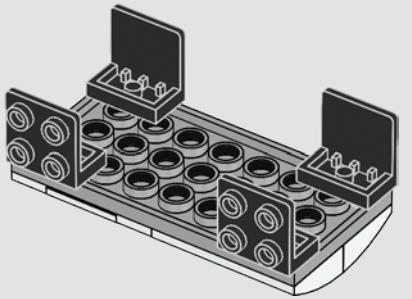

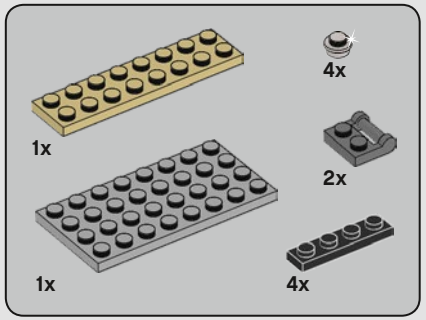

251

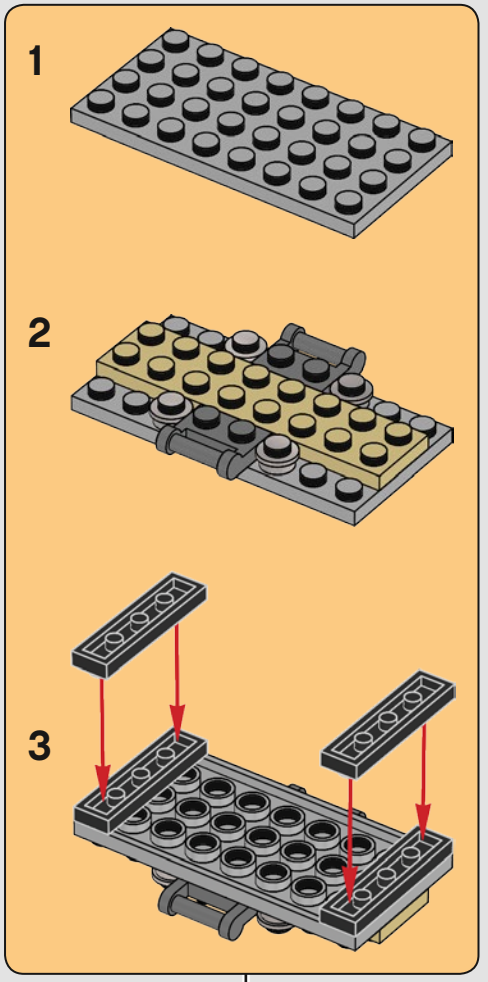

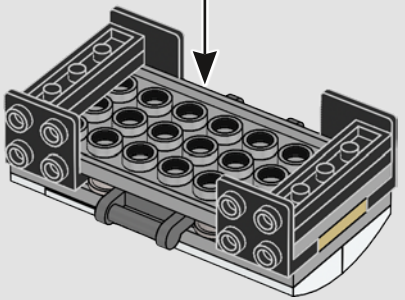

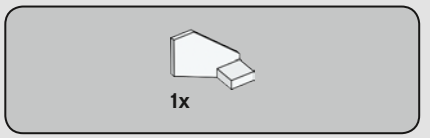

252

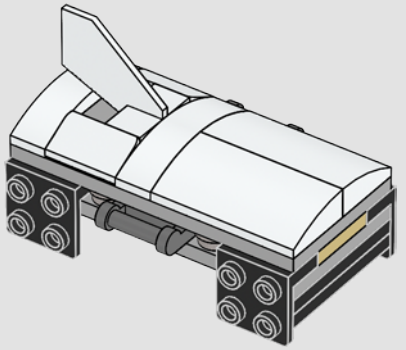

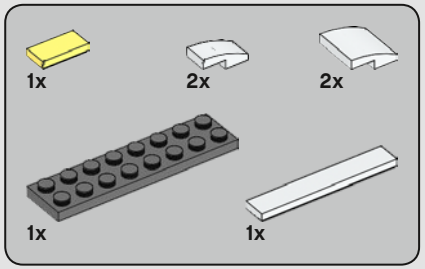

253

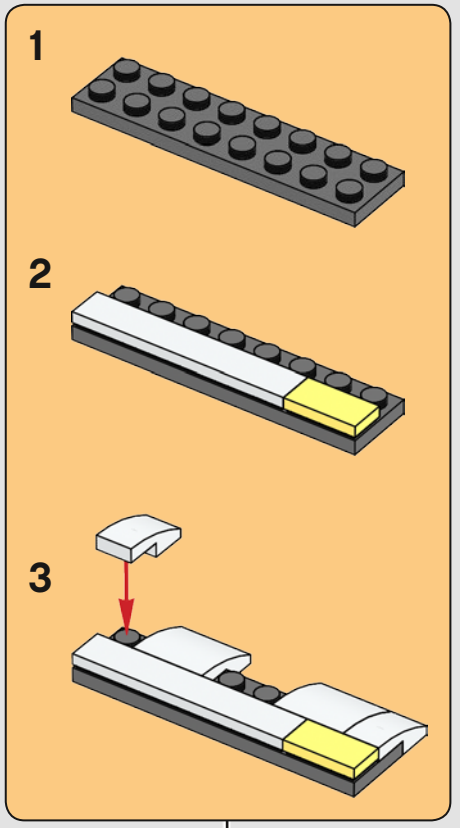

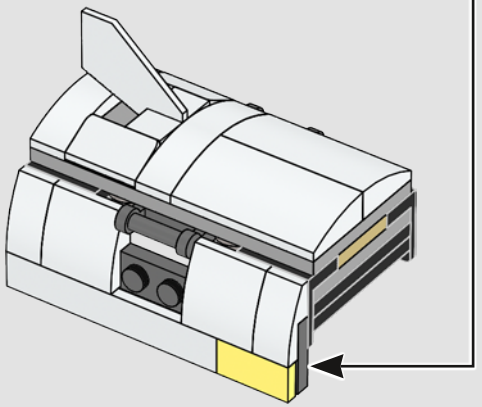

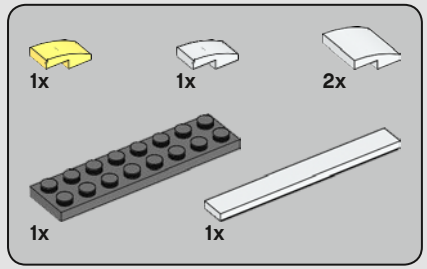

254

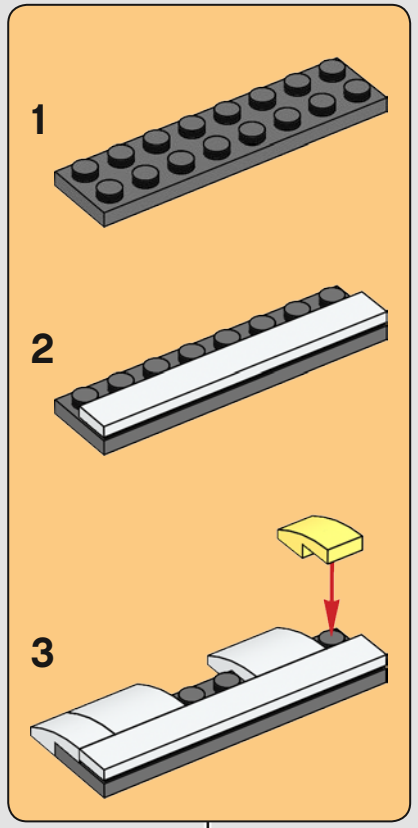

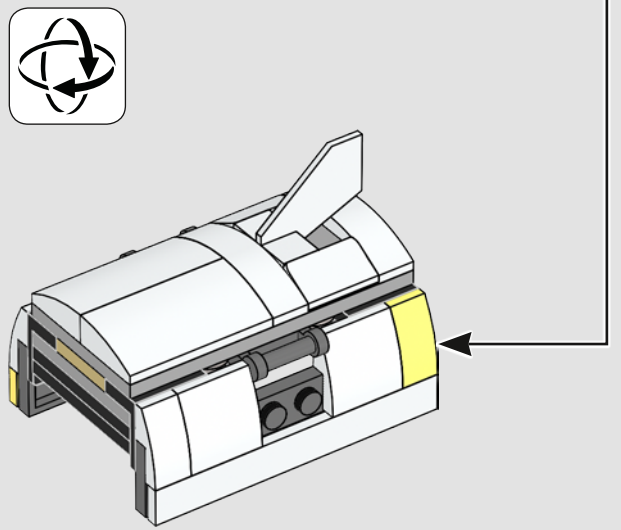

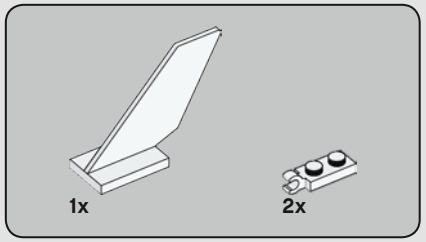

255

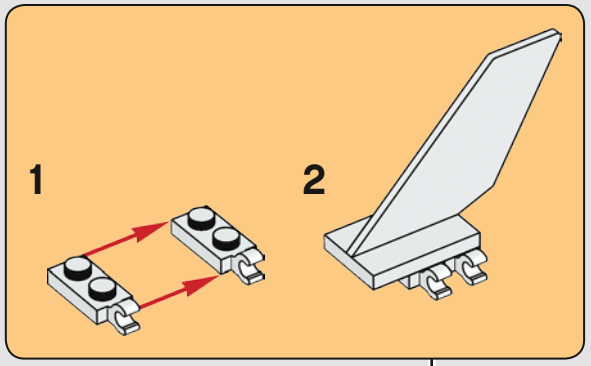

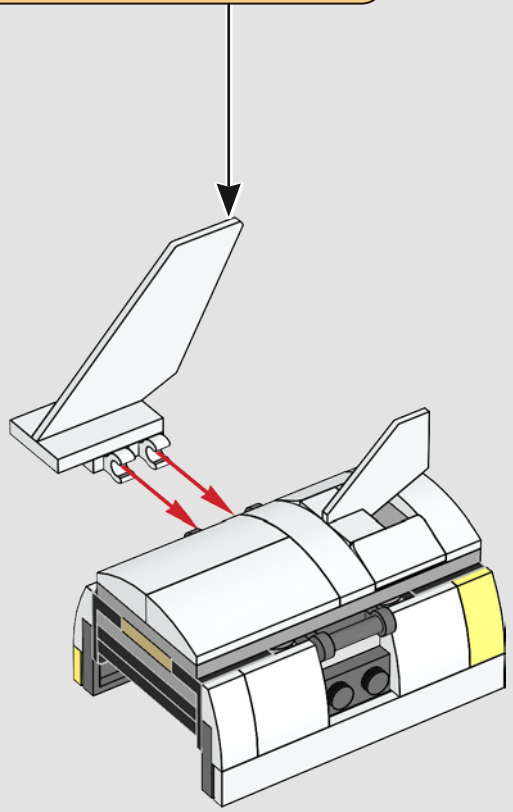

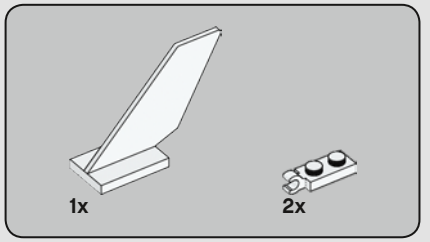

256

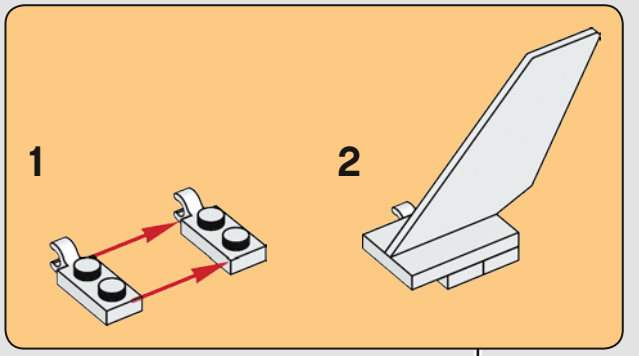

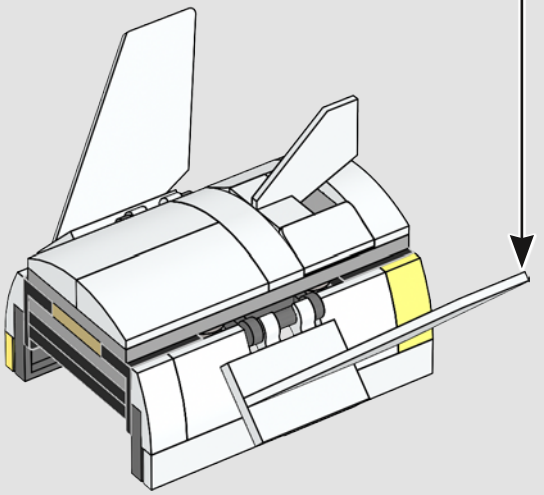

257

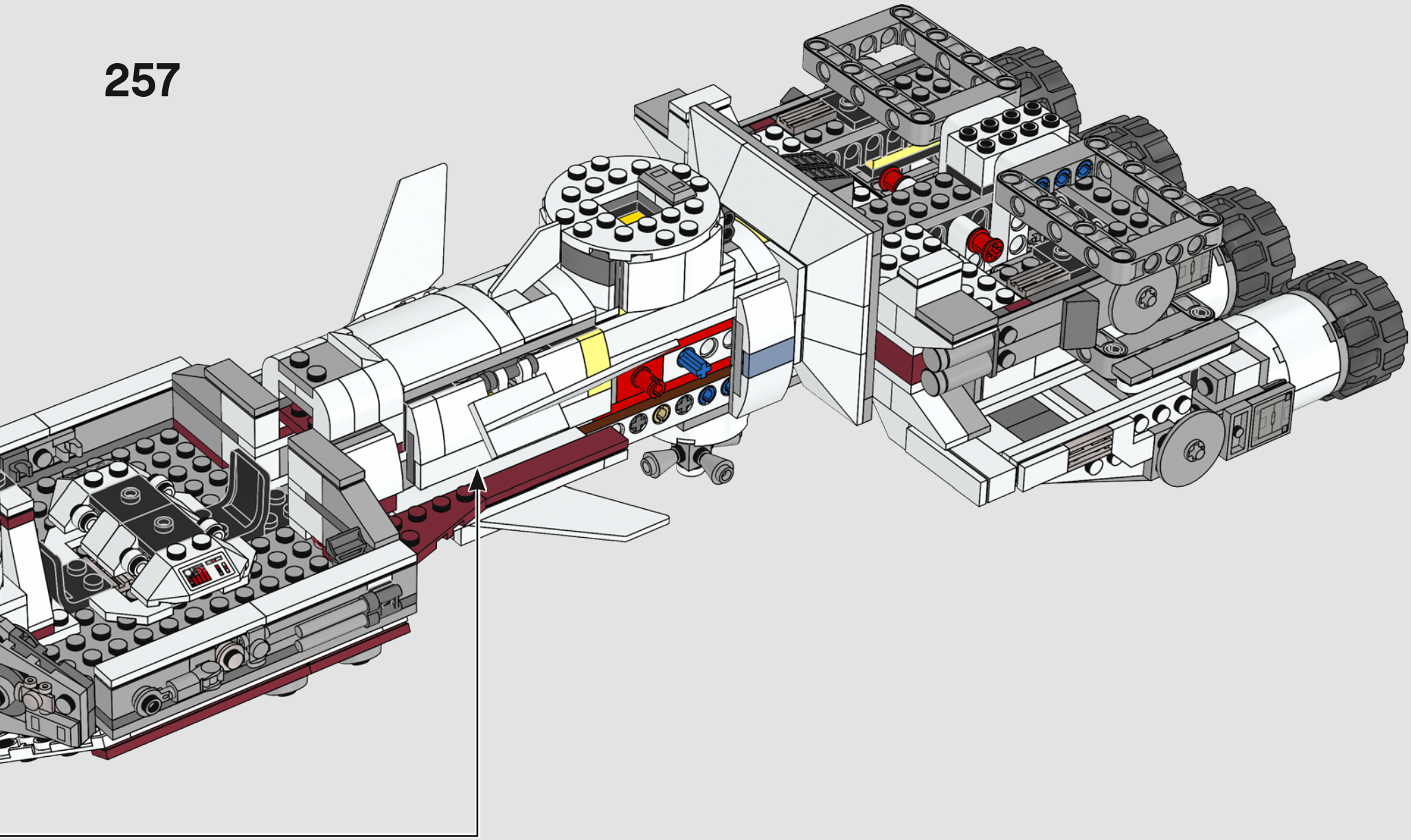

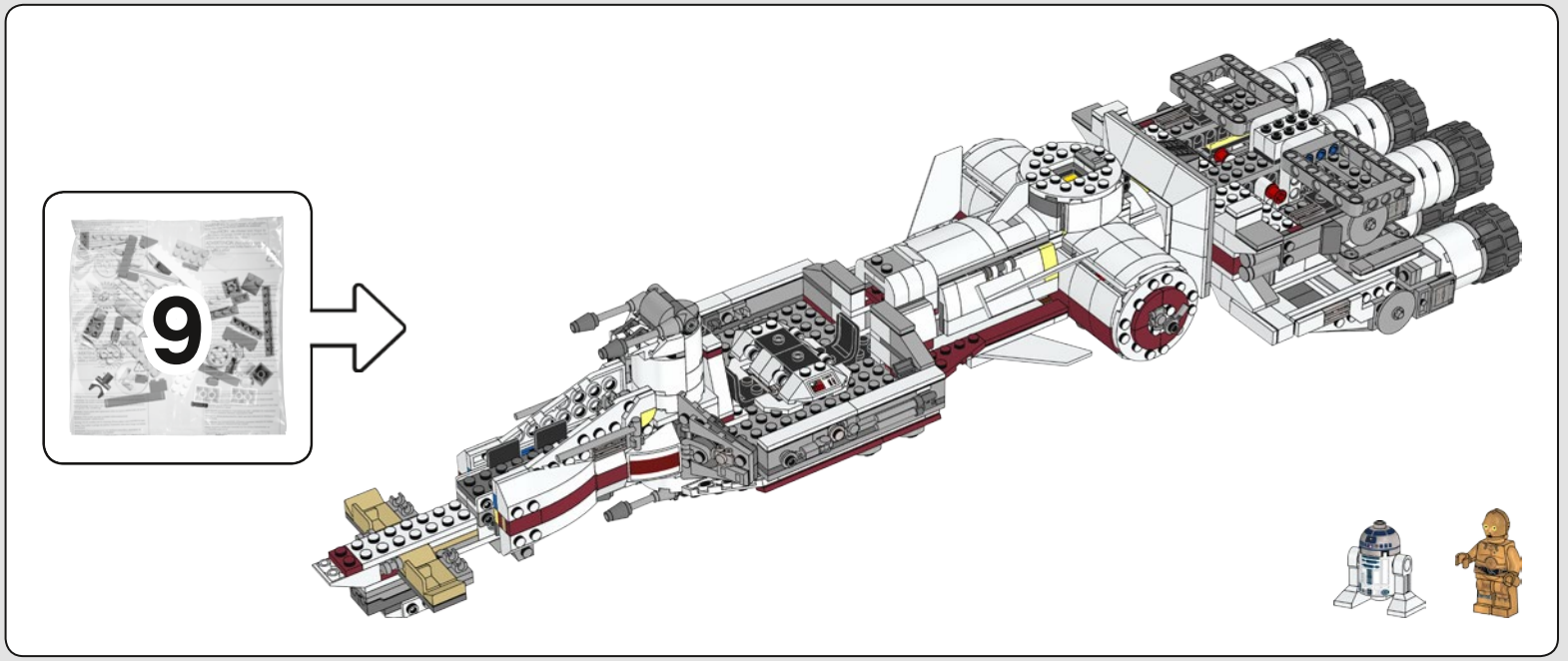
9

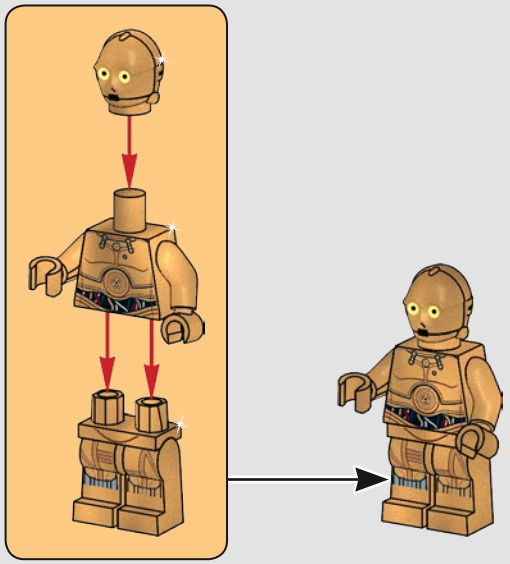

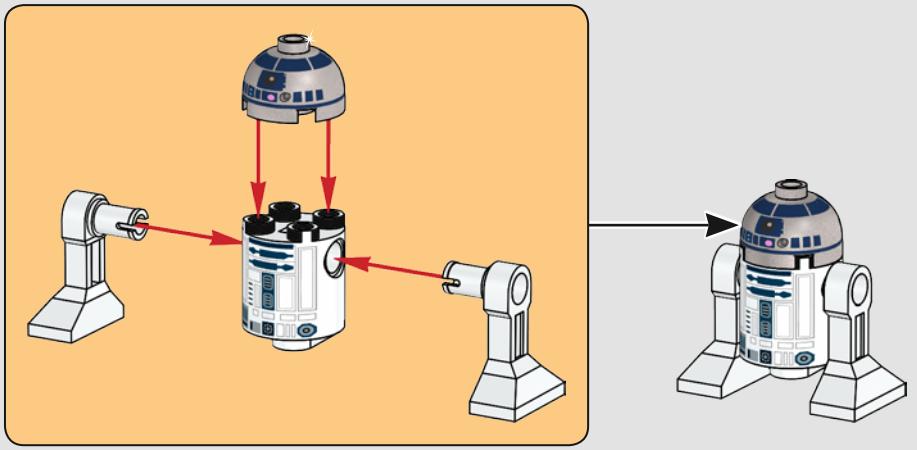

3x

258

1

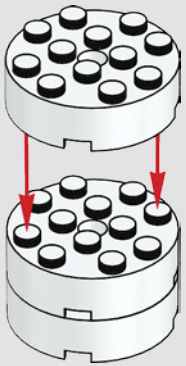

2

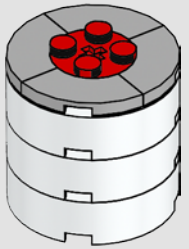

3

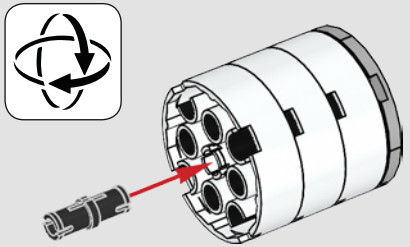

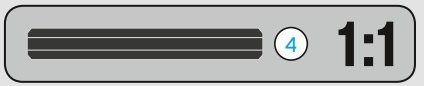

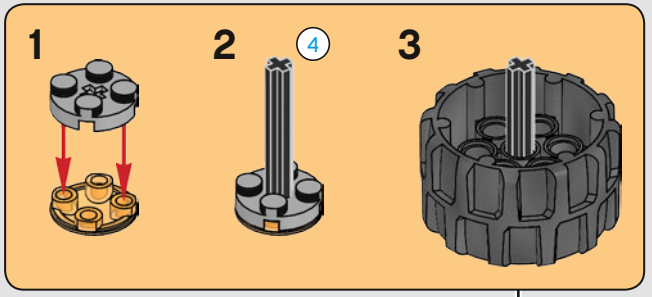

4

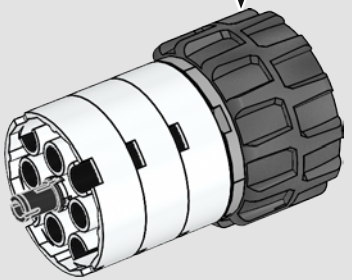

3x

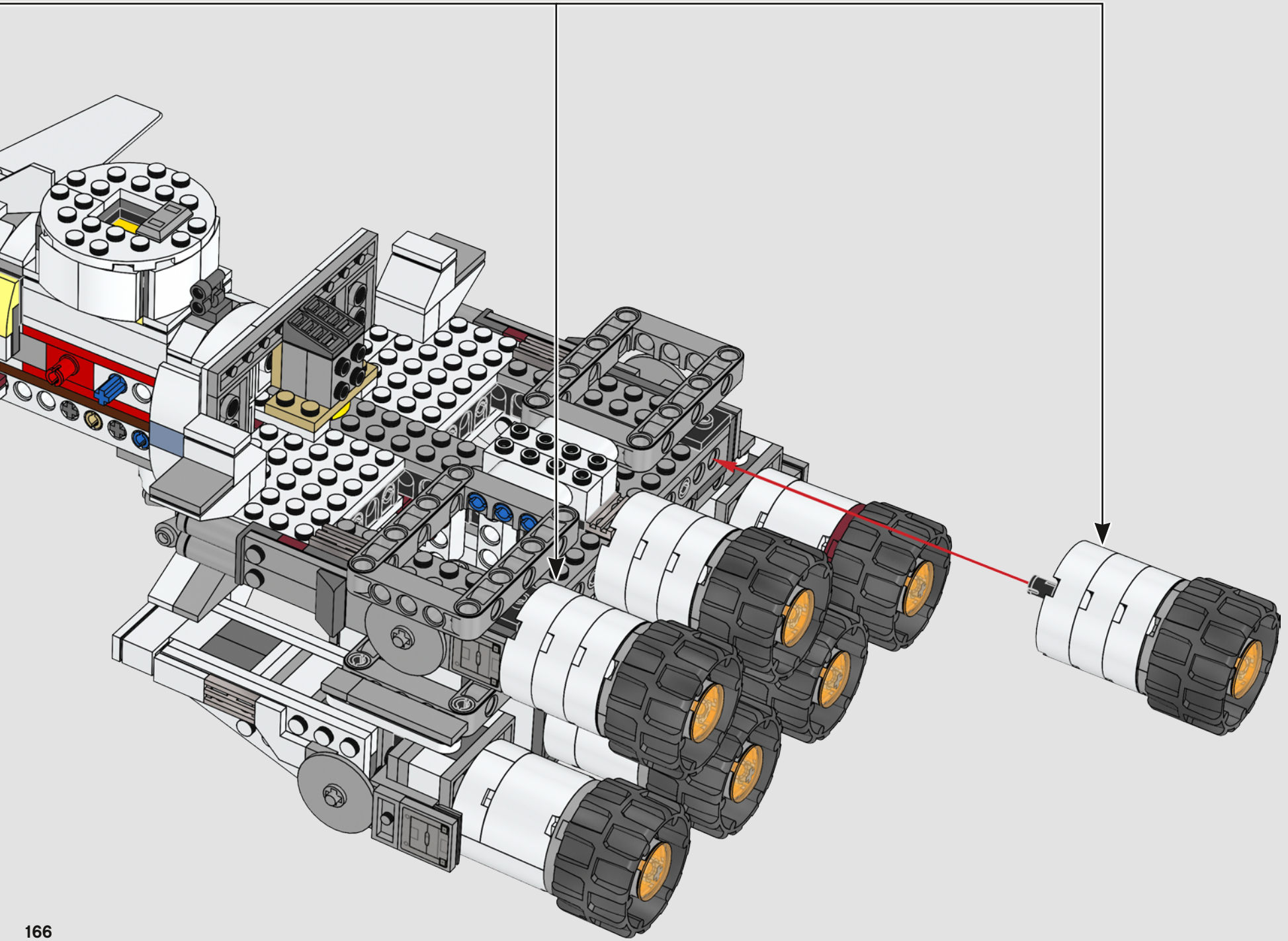

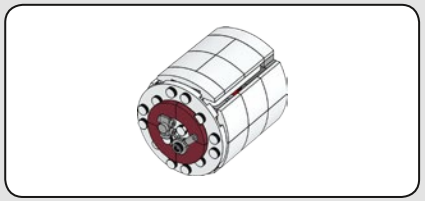

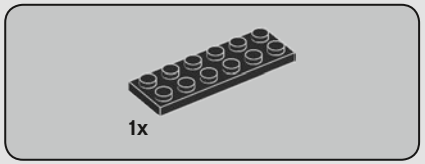

259

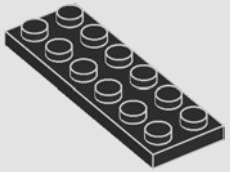

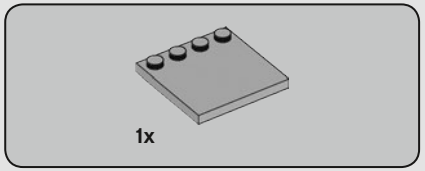

260

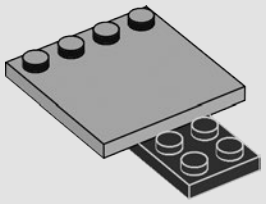

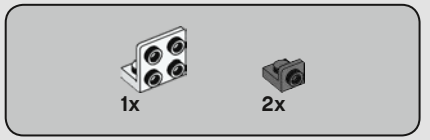

261

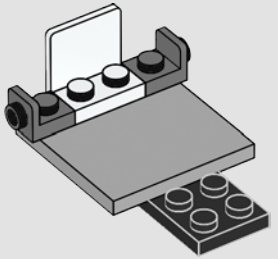

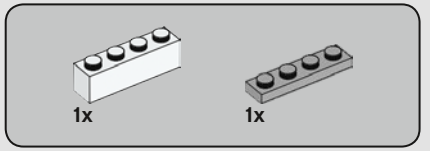

262

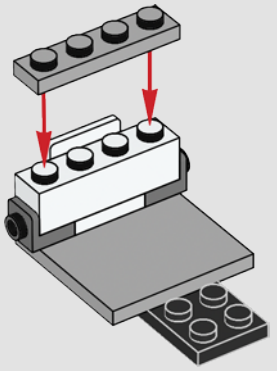

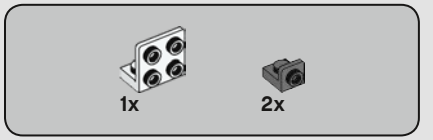

263

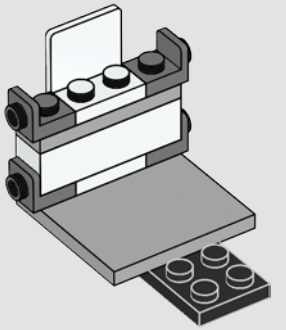

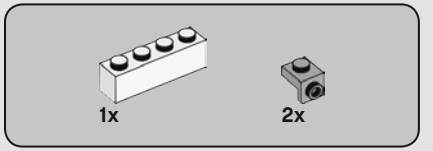

264

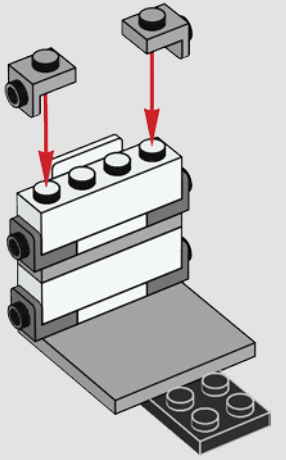

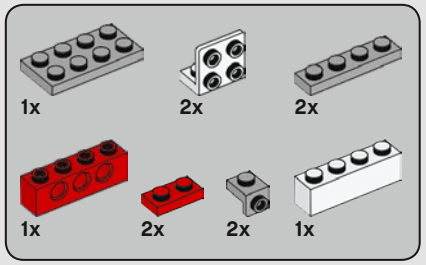

265

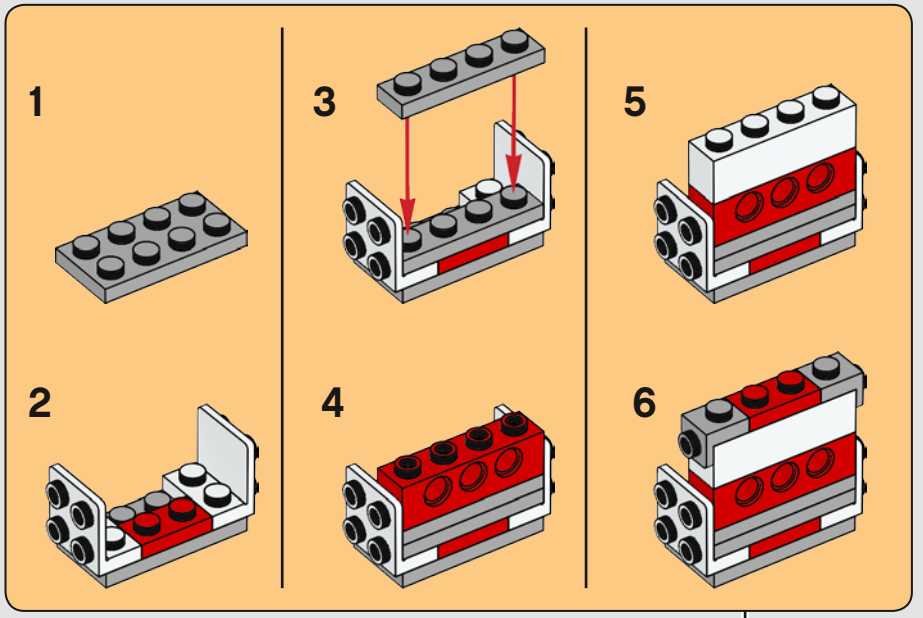

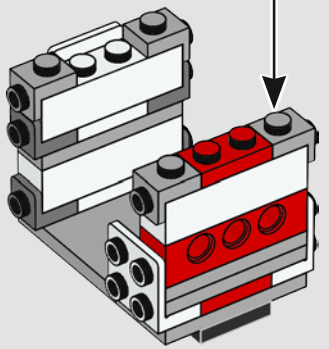

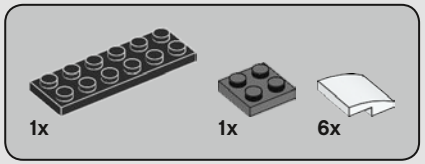

266

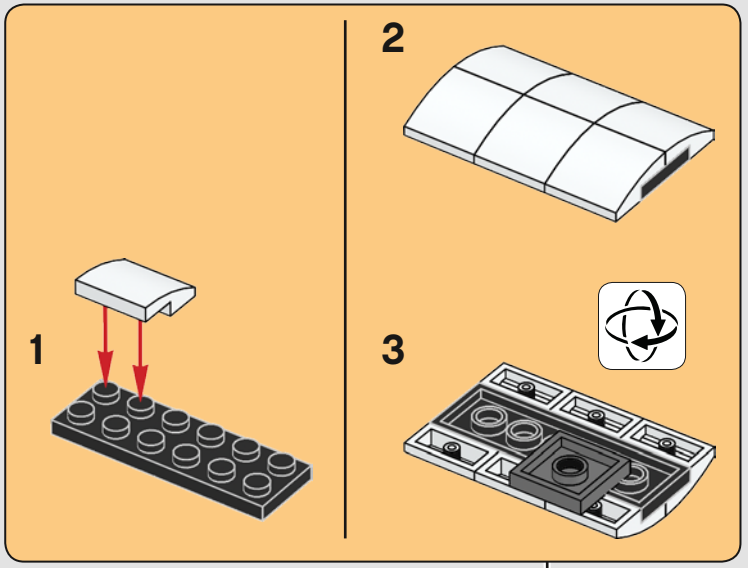

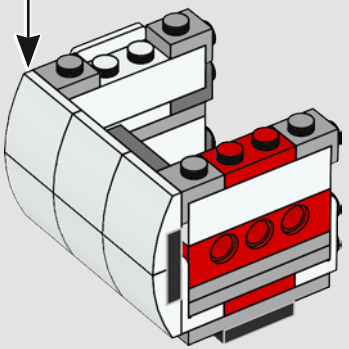

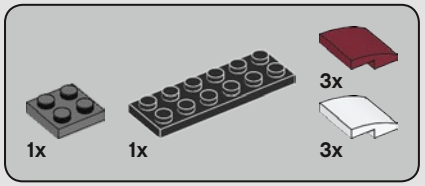

267

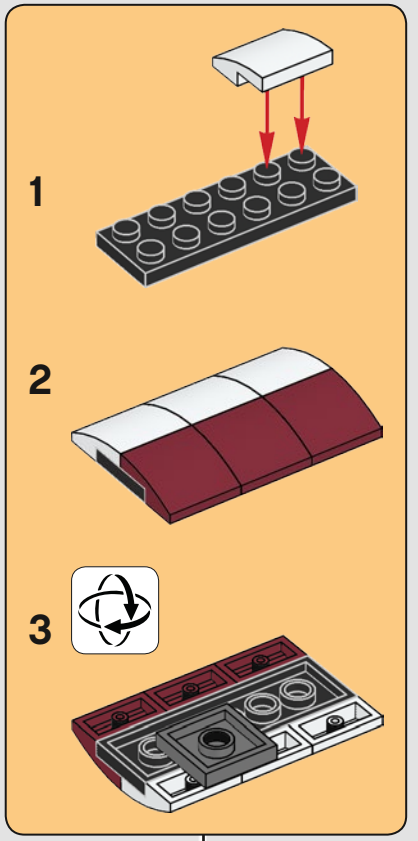

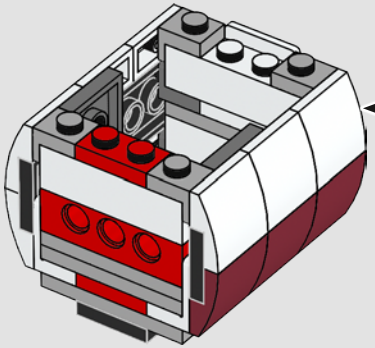

268

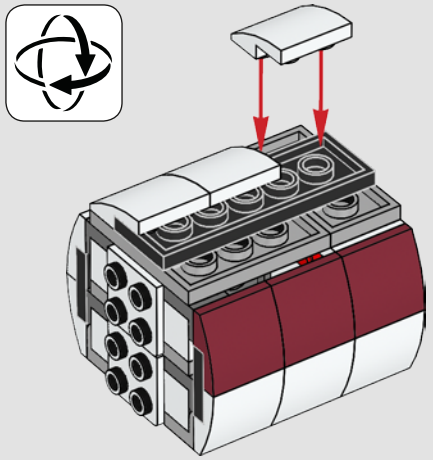

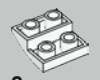

269

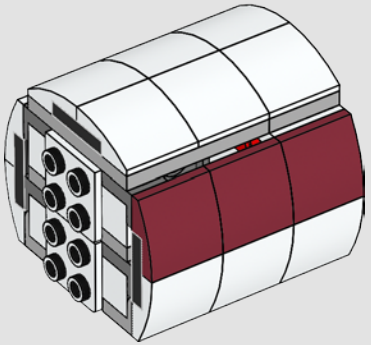

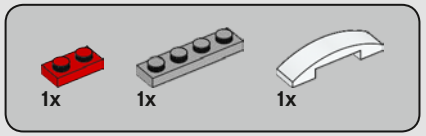

270

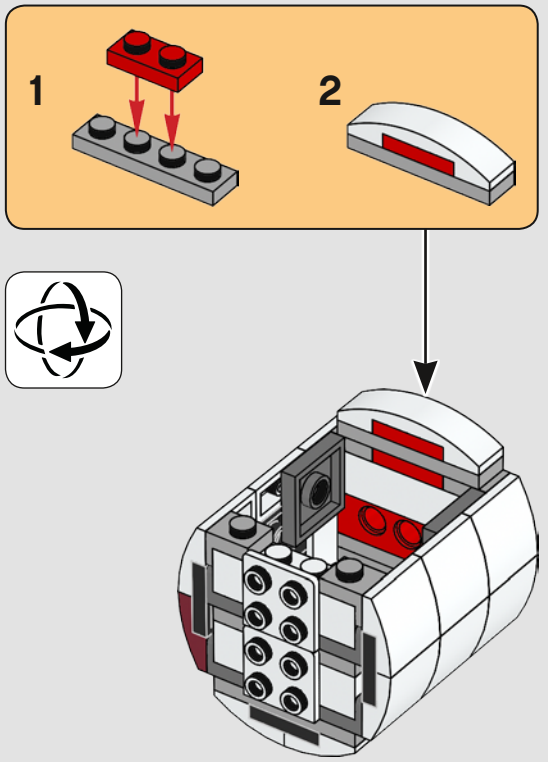

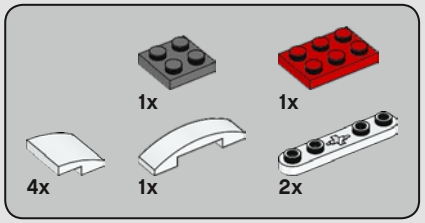

271

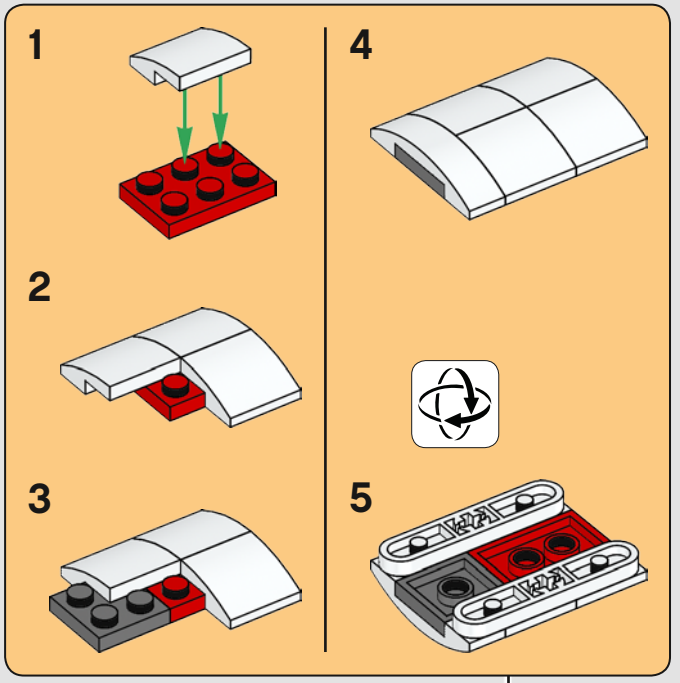

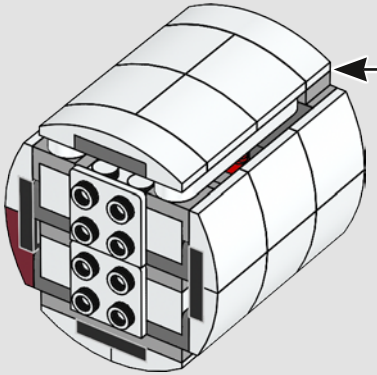

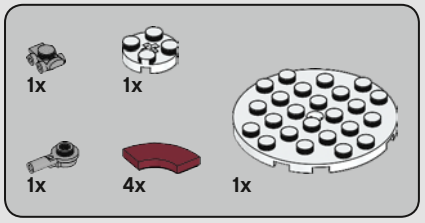

272

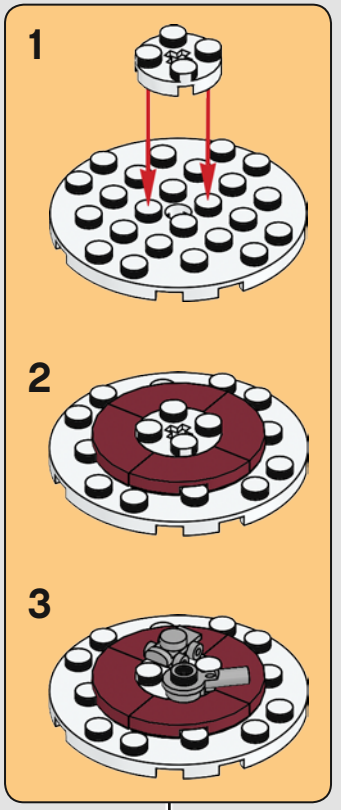

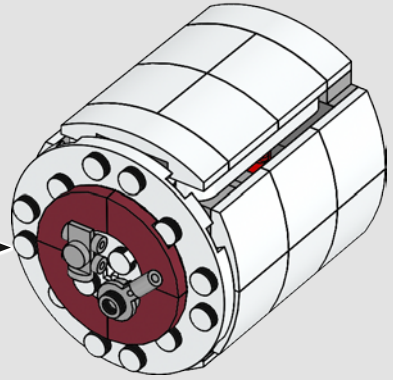

273

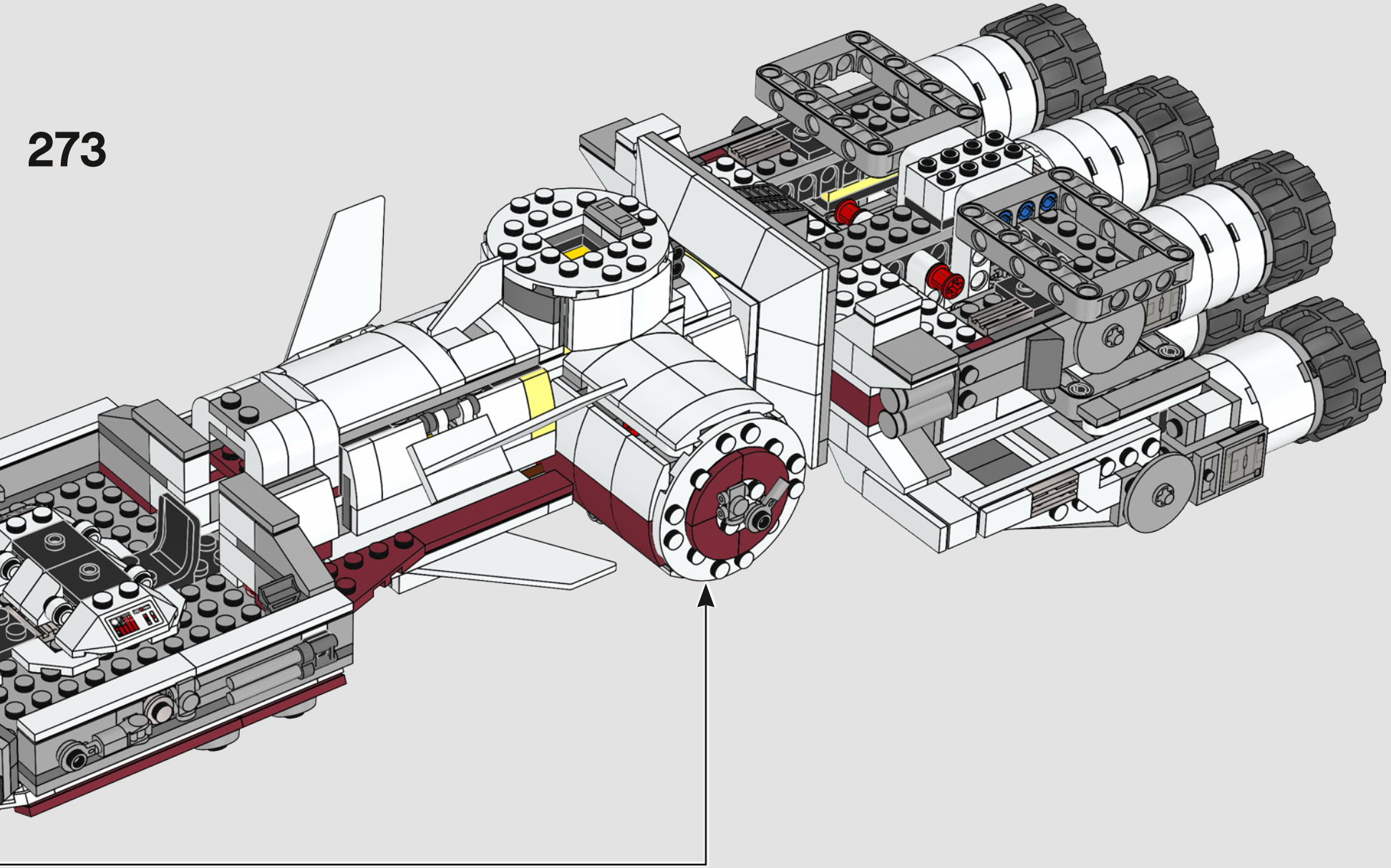

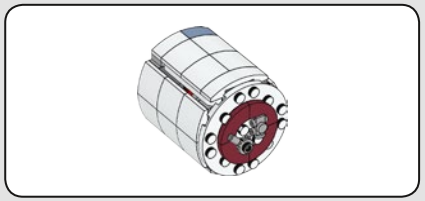

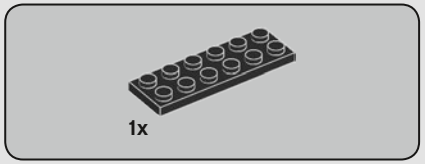

274

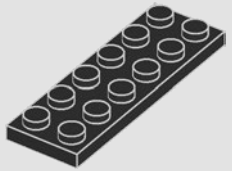

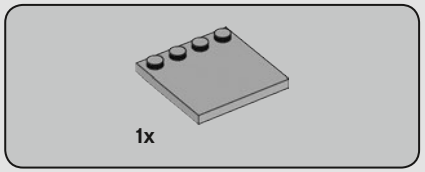

275

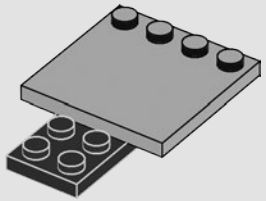

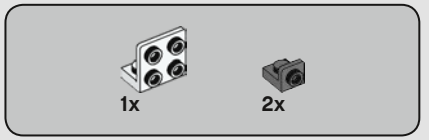

276

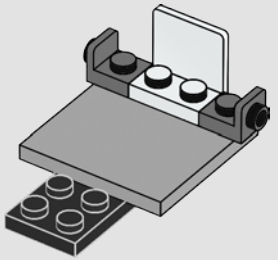

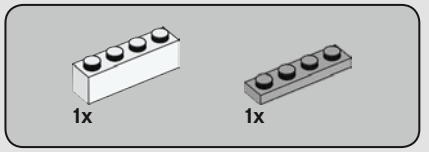

277

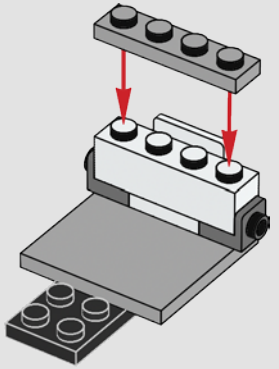

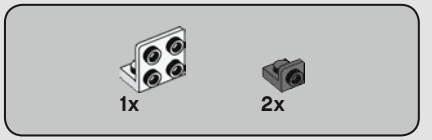

278

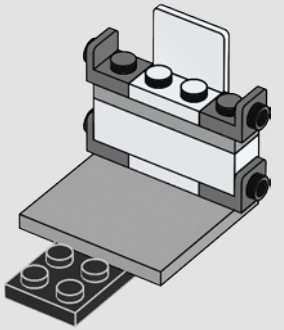

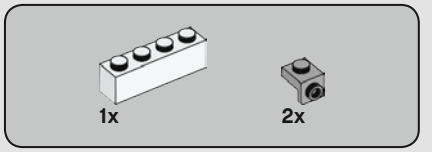

279

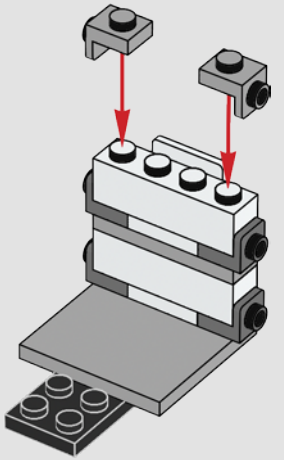

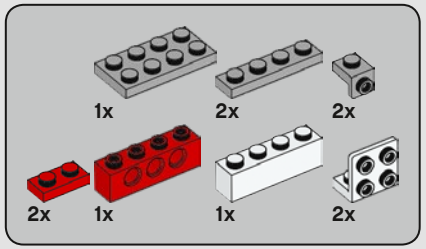

280

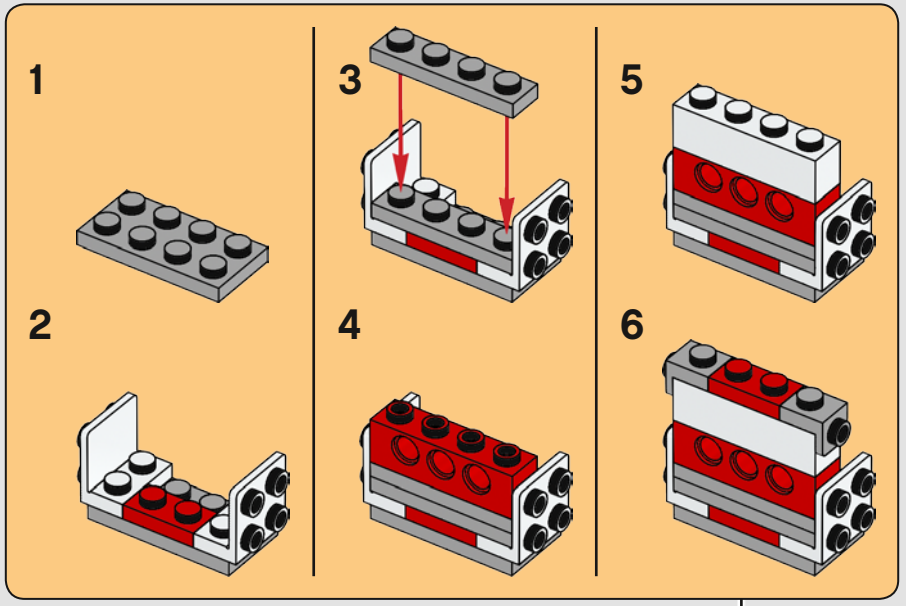

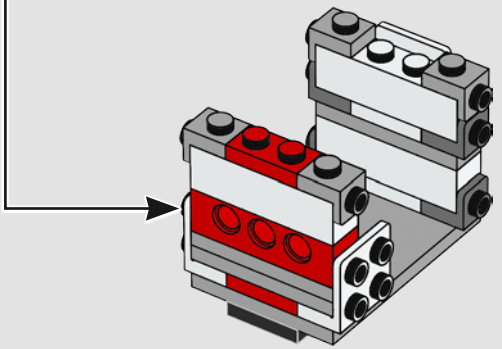

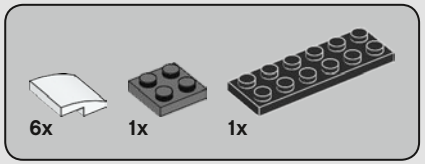

281

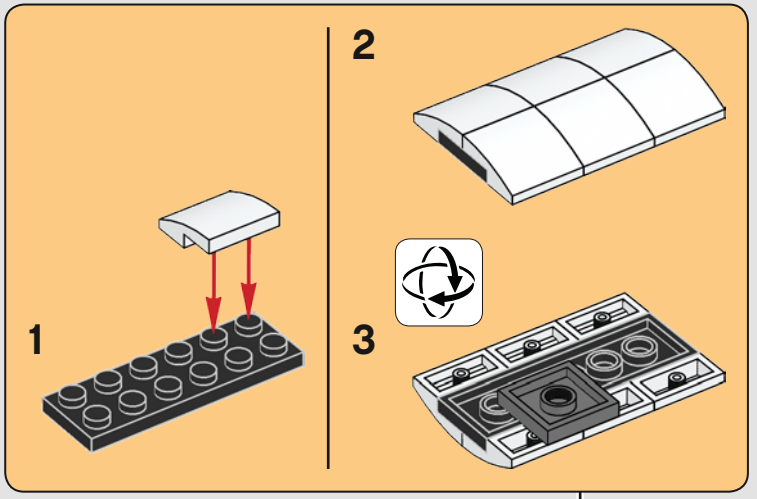

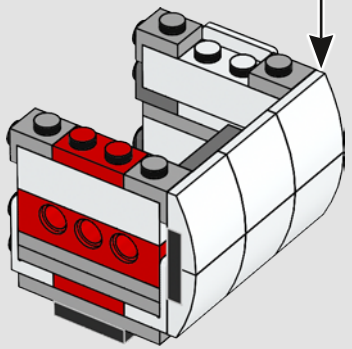

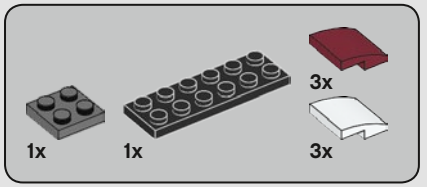

282

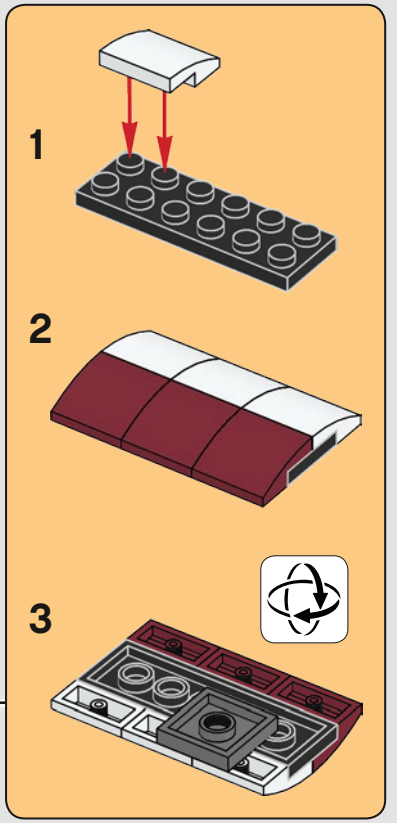

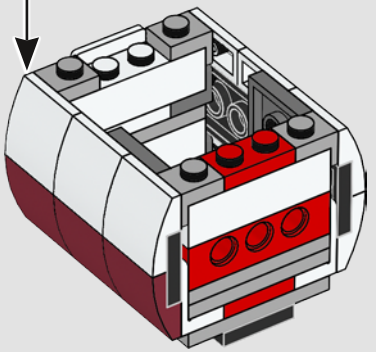

283

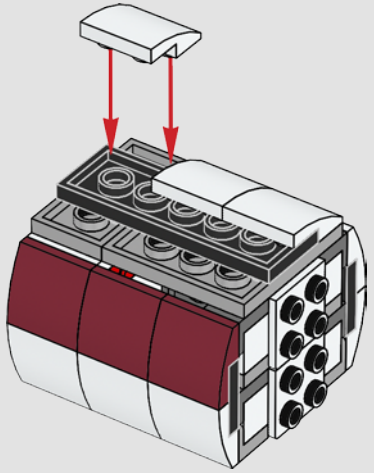

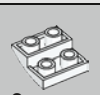

284

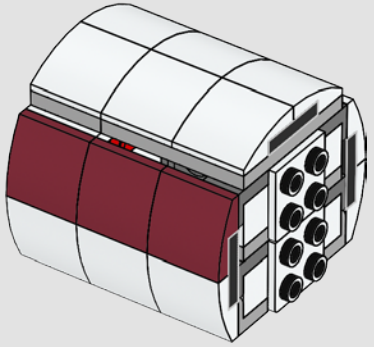

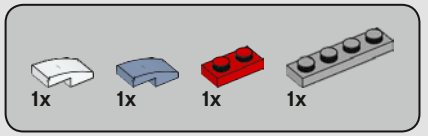

285

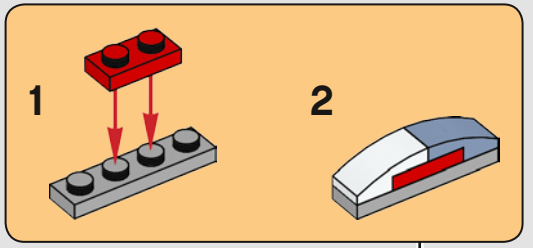

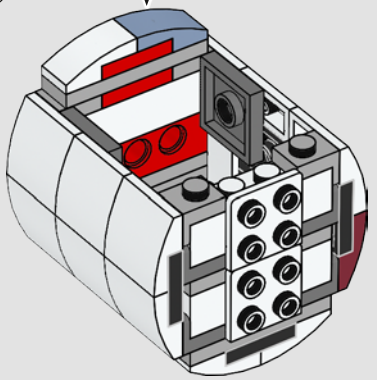

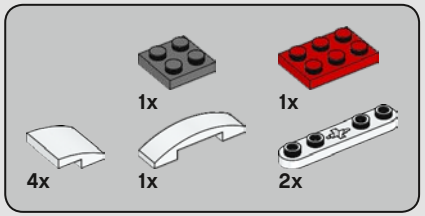

286

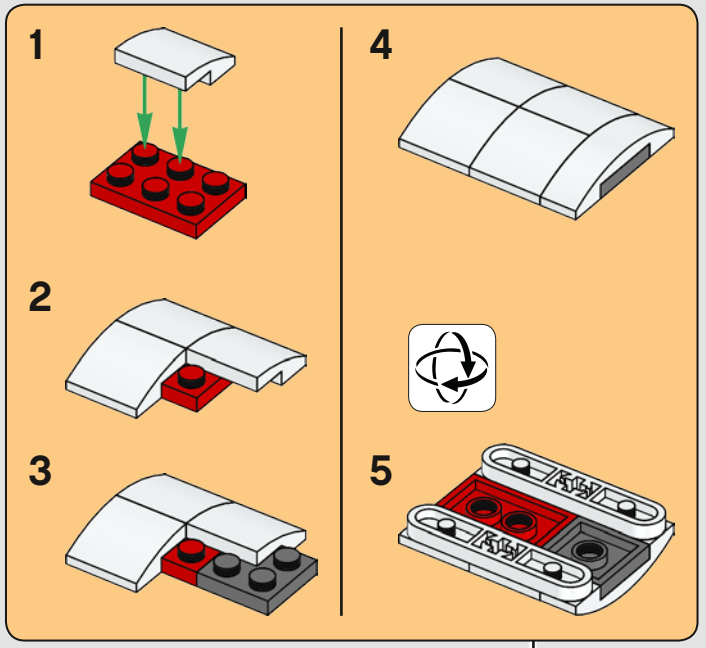

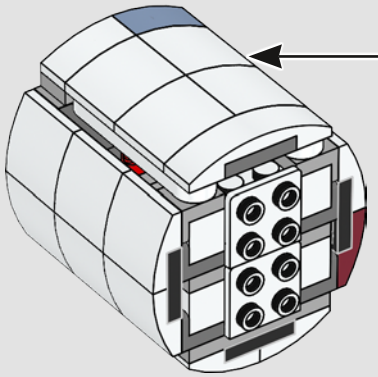

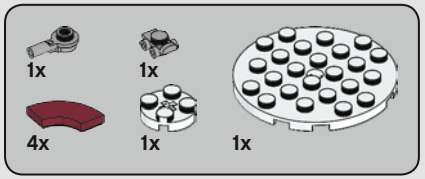

287

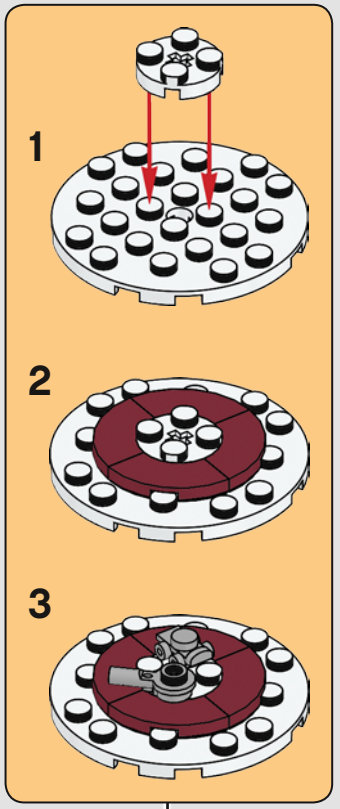

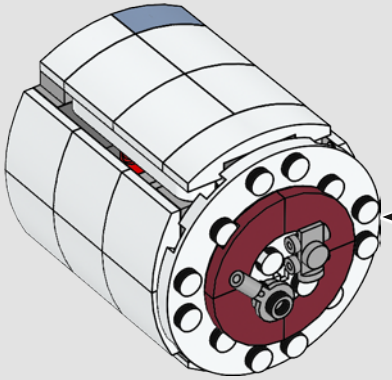

288

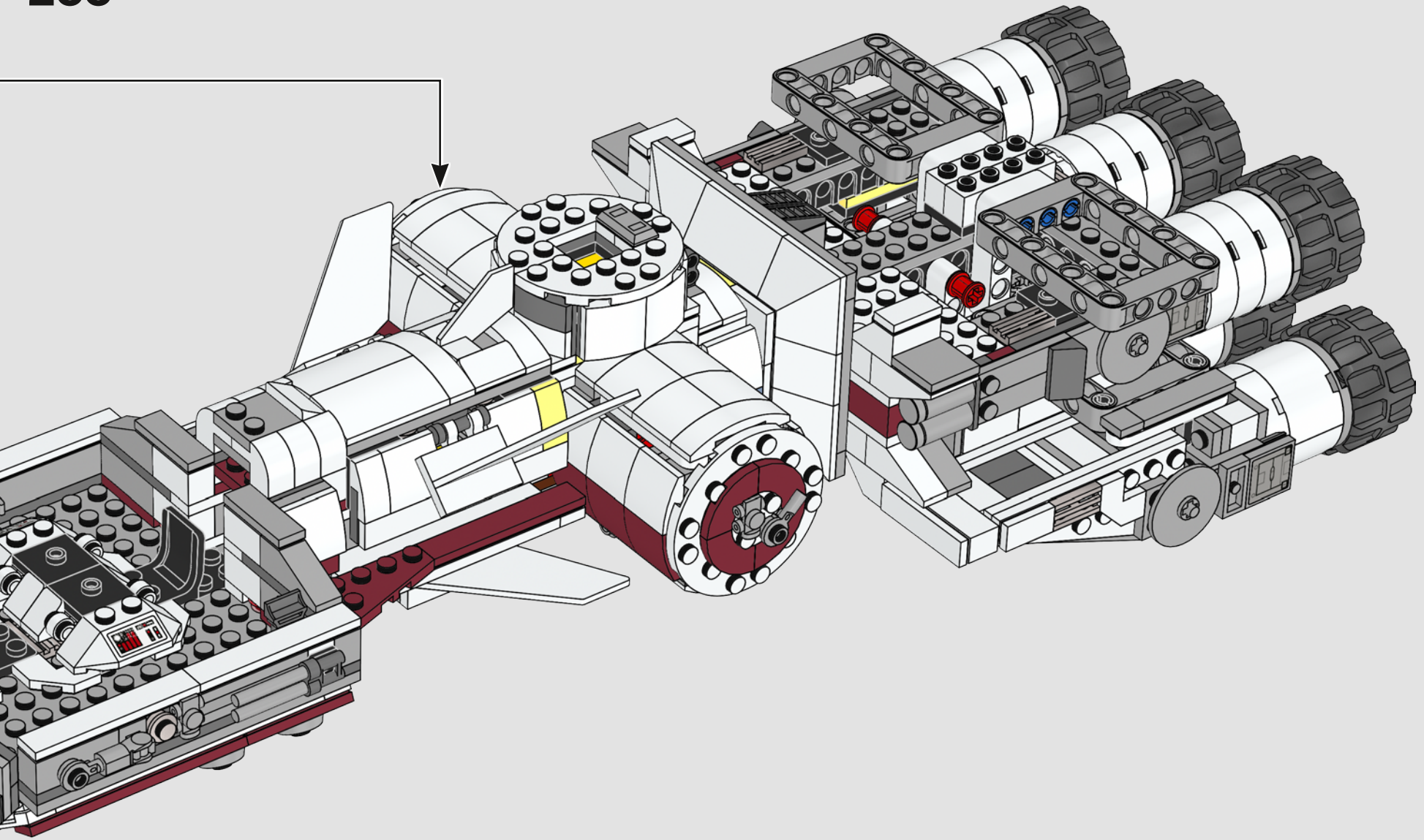

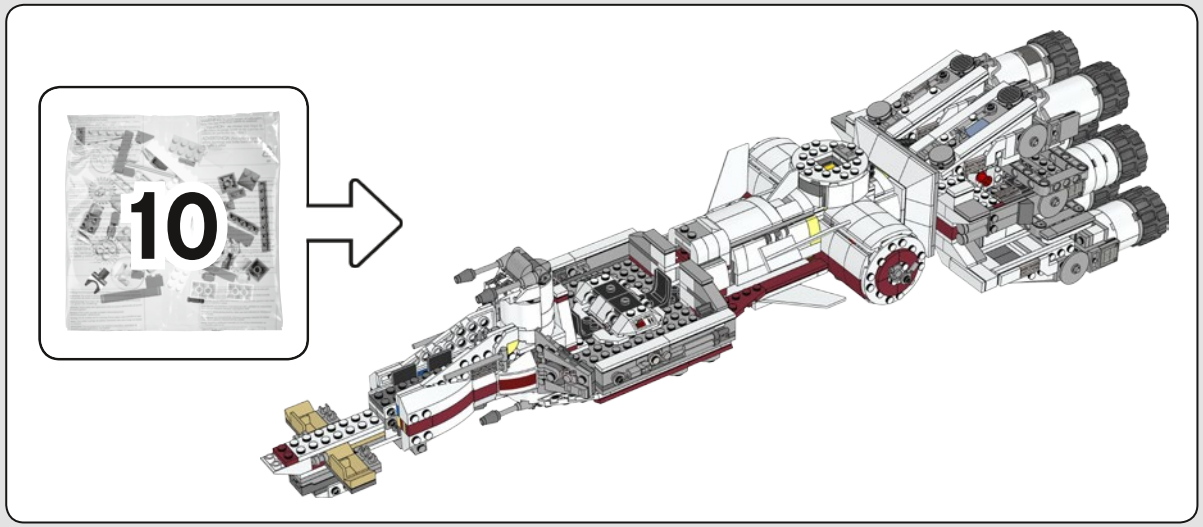

4x

289

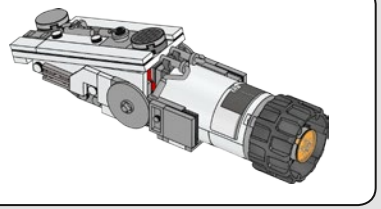

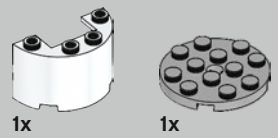

290

291

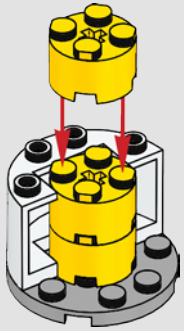

292

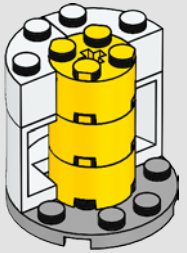

293

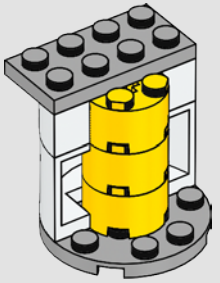

294

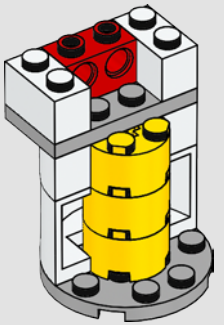

295

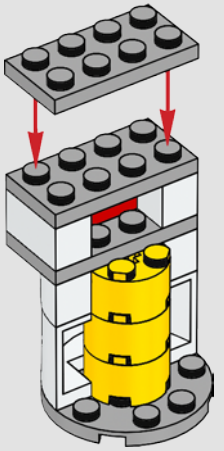

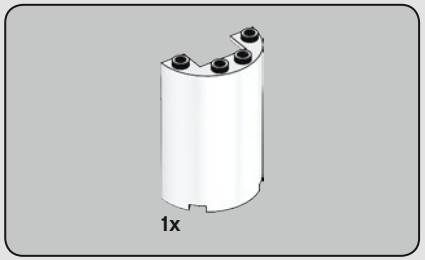

296

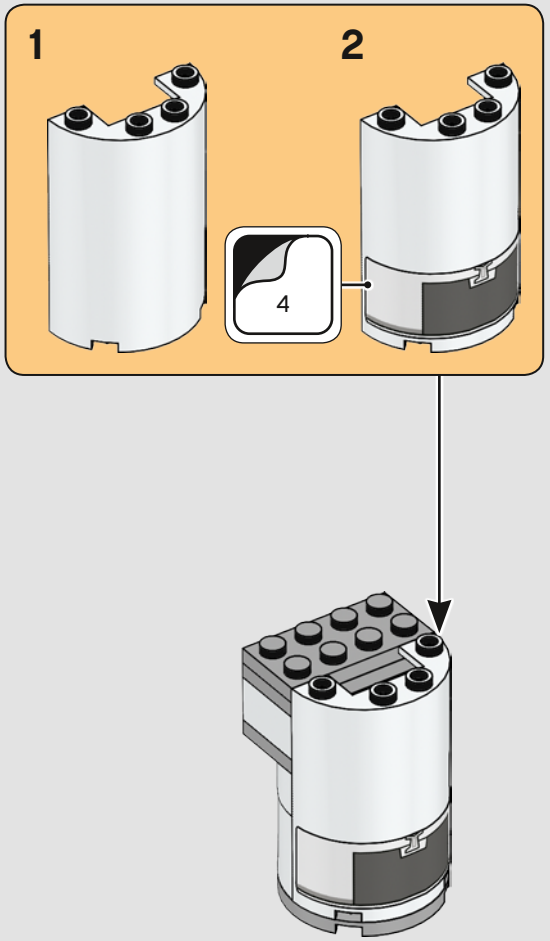

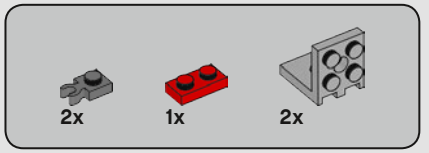

297

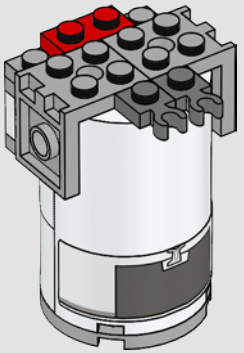

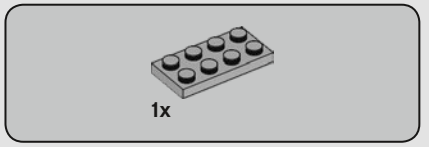

298

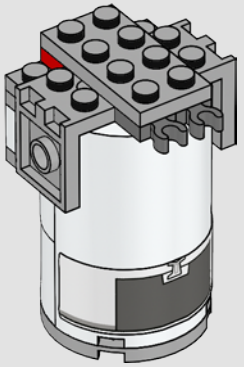

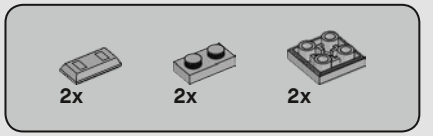

299

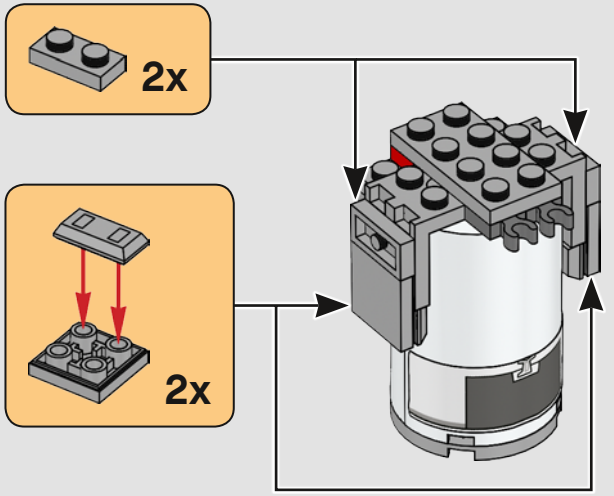

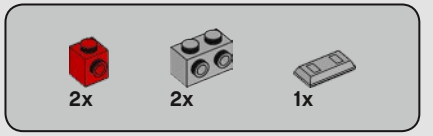

300

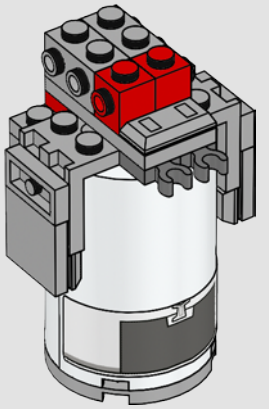

301

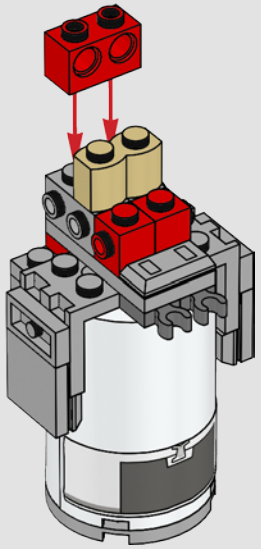

302

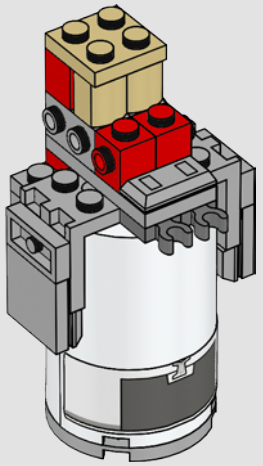

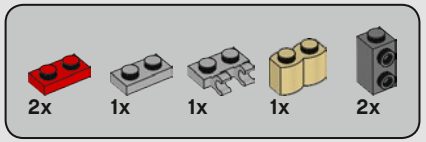

303

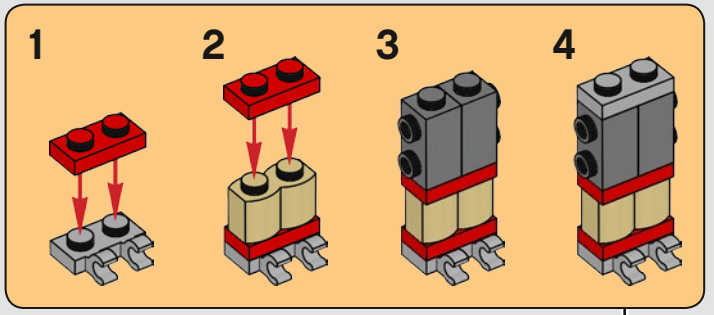

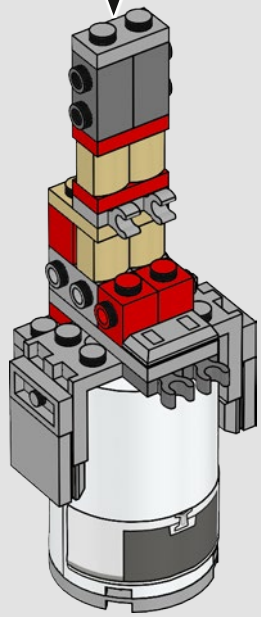

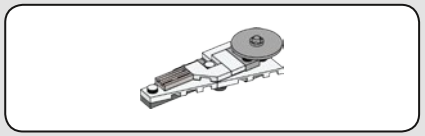

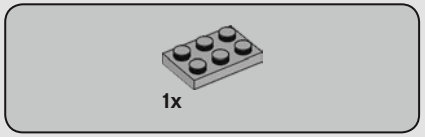

304

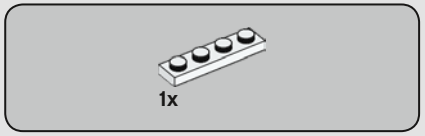

305

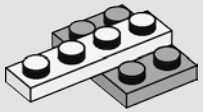

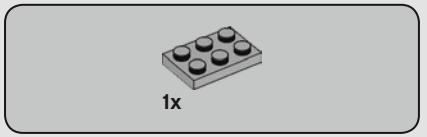

306

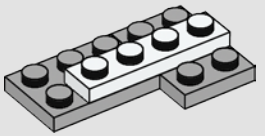

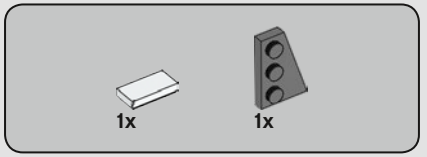

307

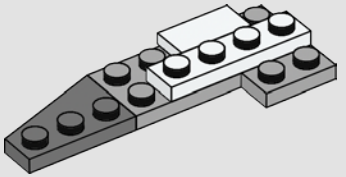

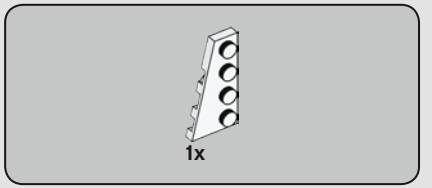

308

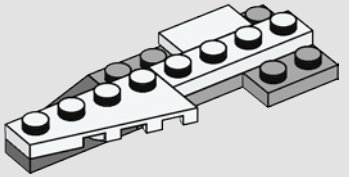

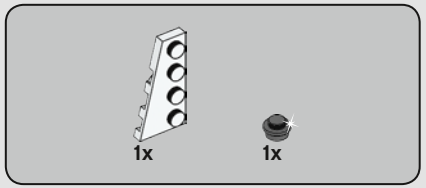

309

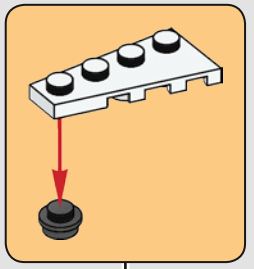

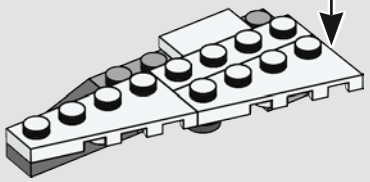

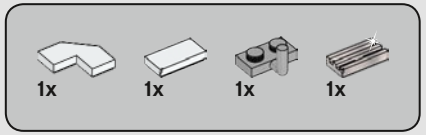

310

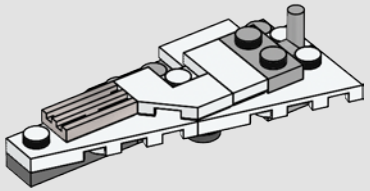

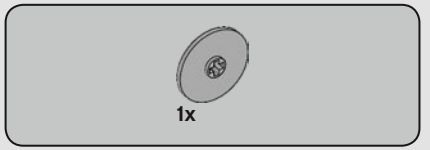

311

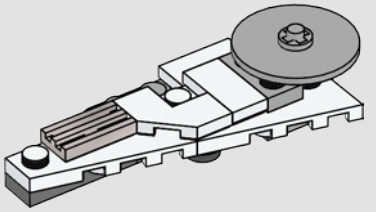

312

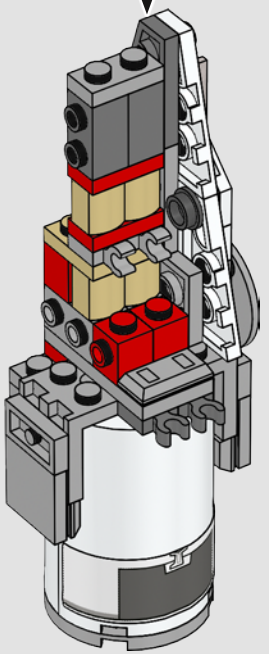

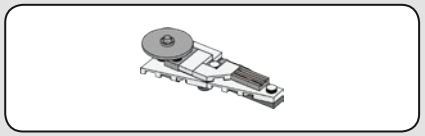

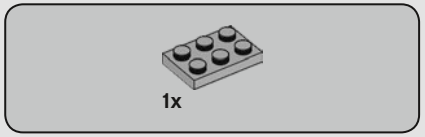

313

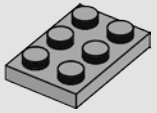

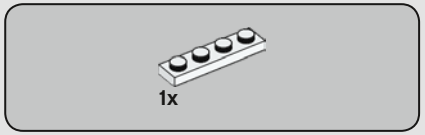

314

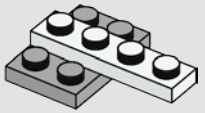

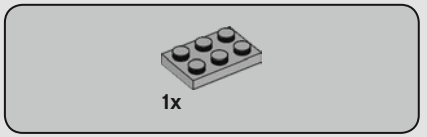

315

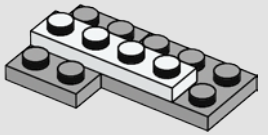

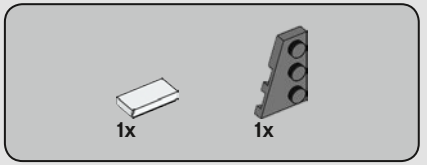

316

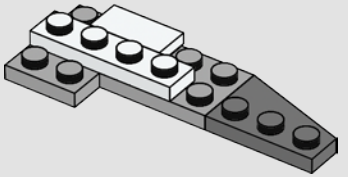

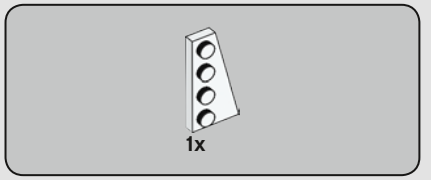

317

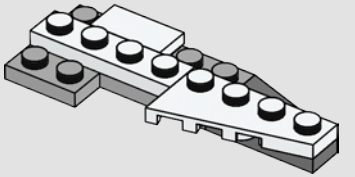

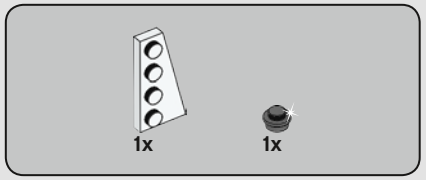

318

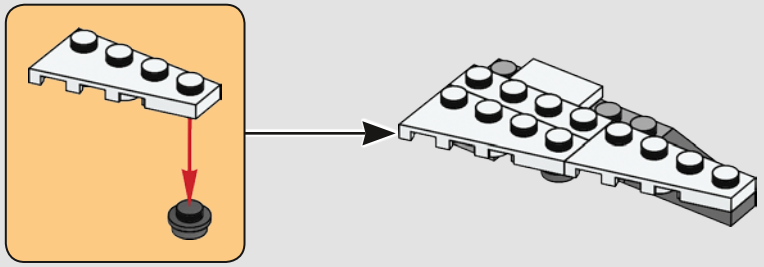

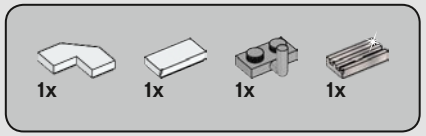

319

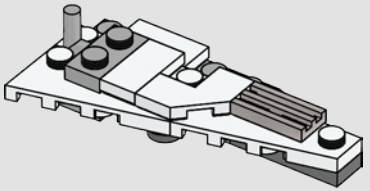

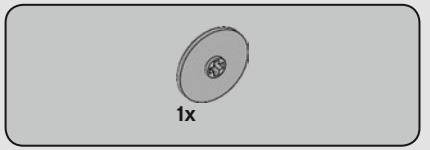

320

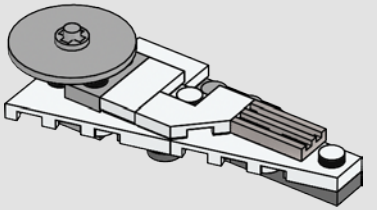

321

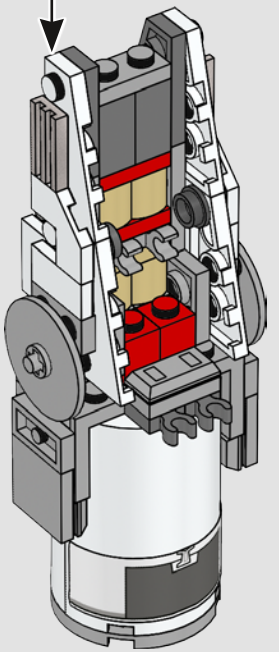

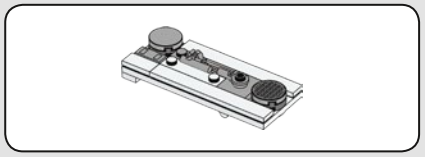

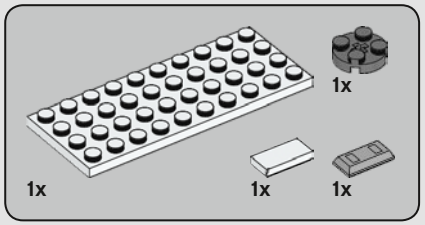

322

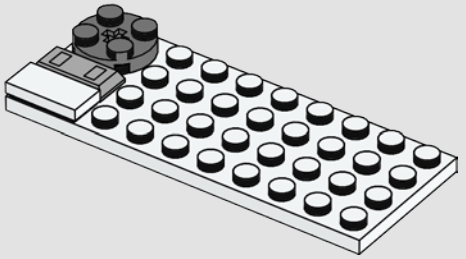

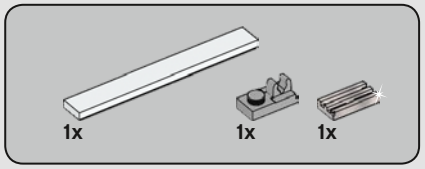

323

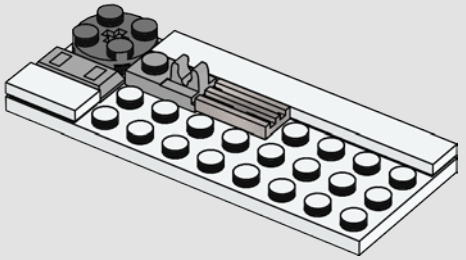

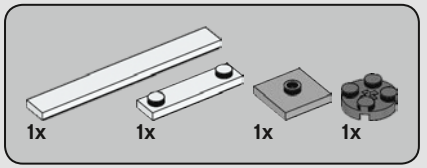

324

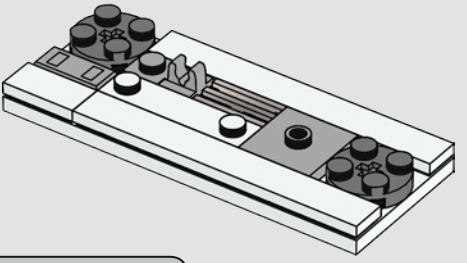

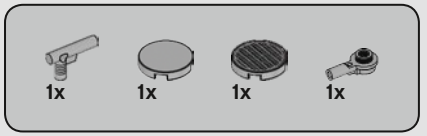

325

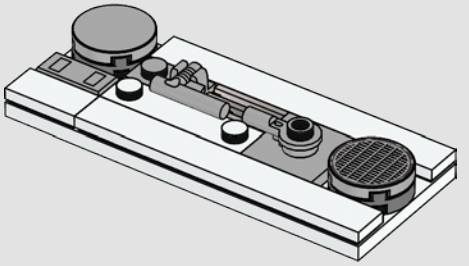

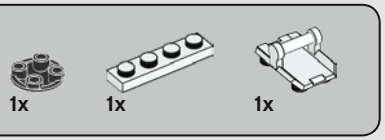

326

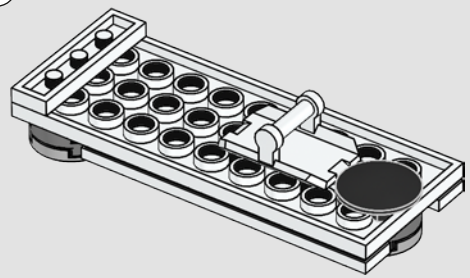

327

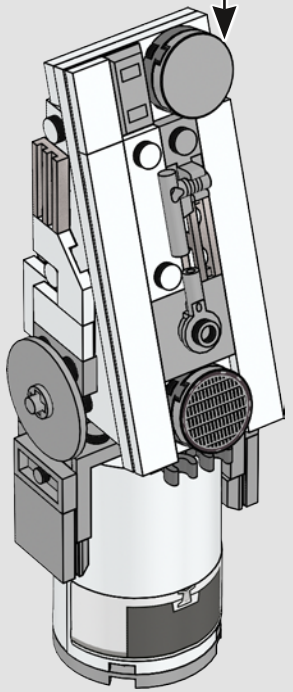

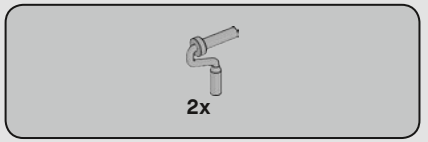

328

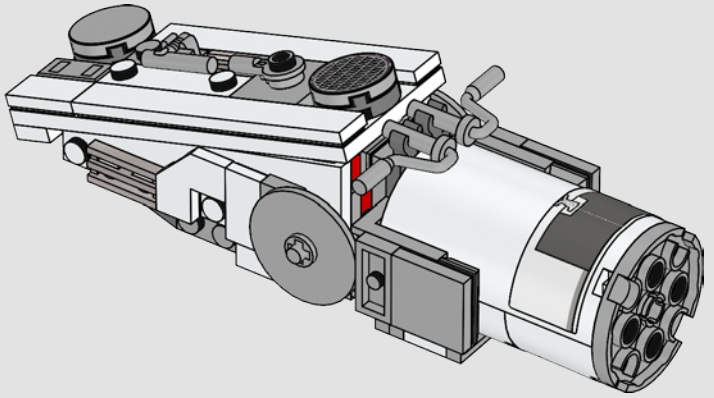

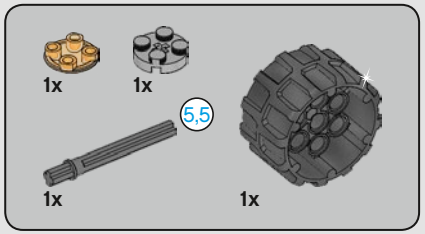

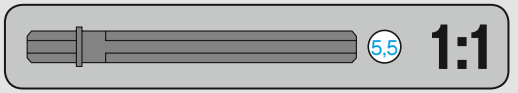

329

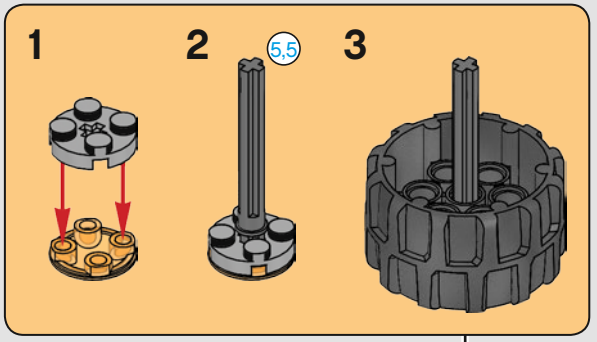

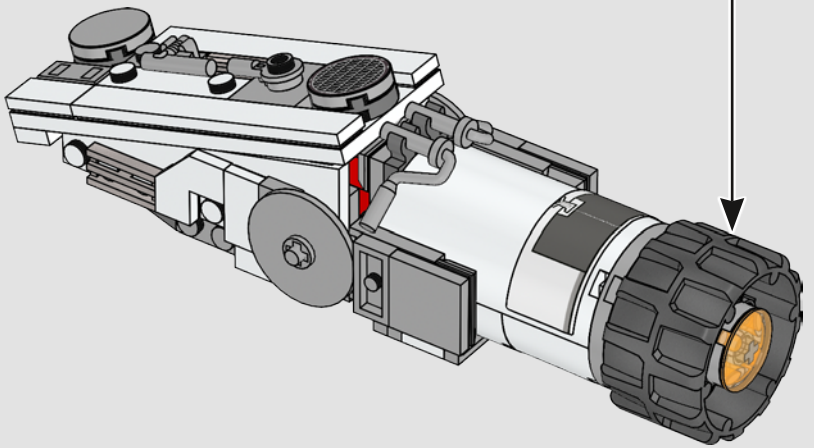

330

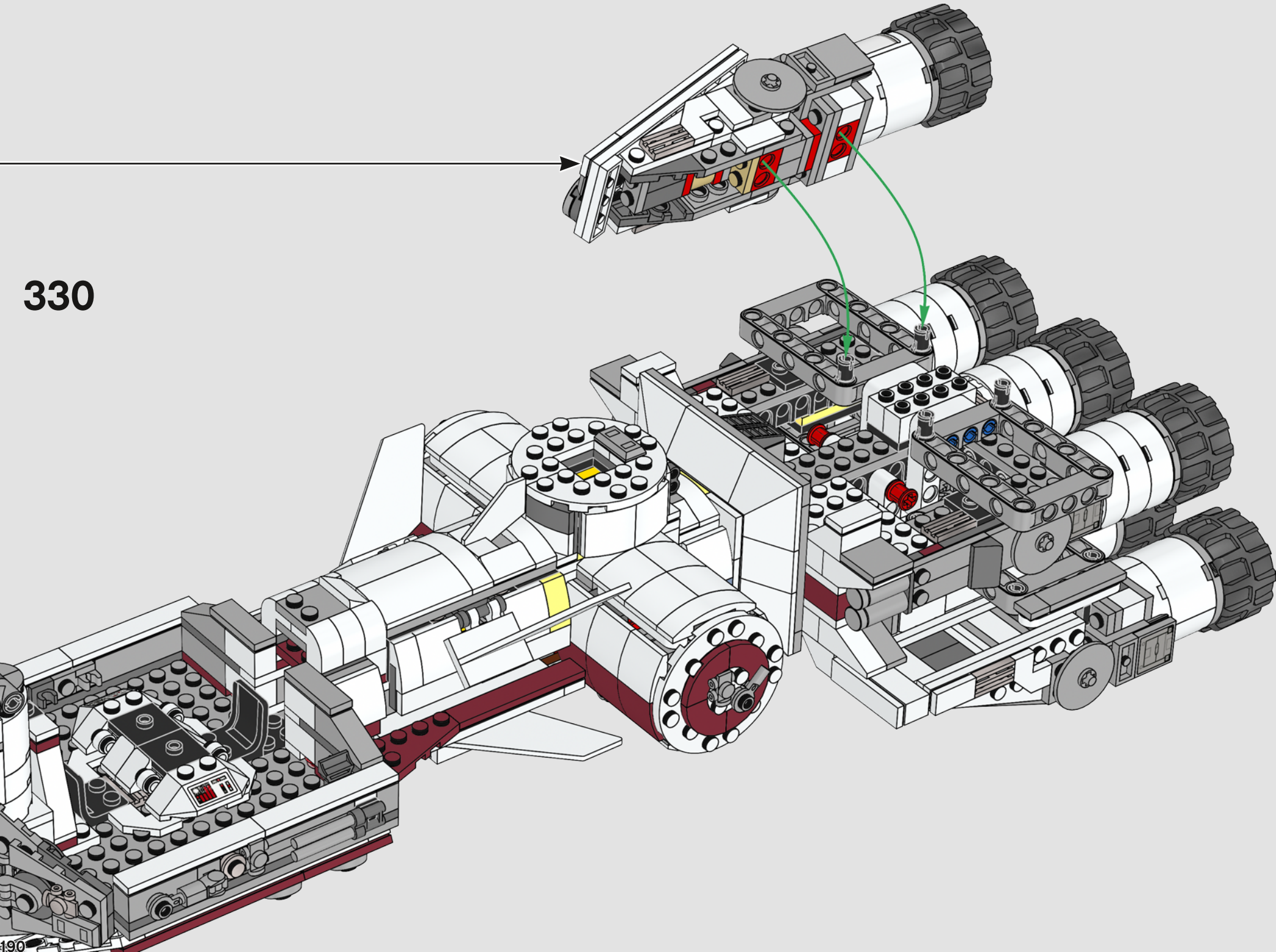

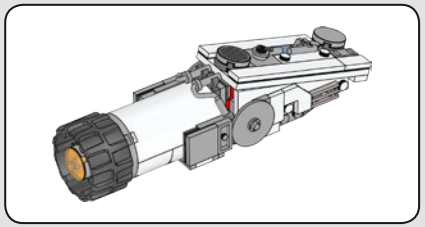

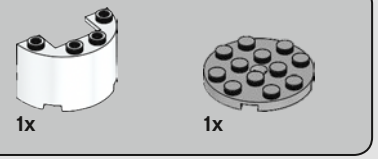

331

332

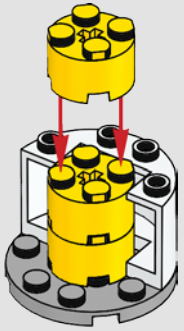

333

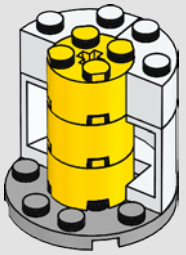

334

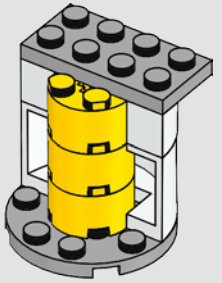

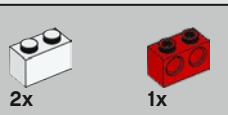

335

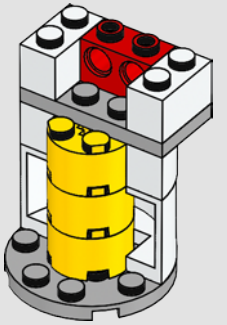

336

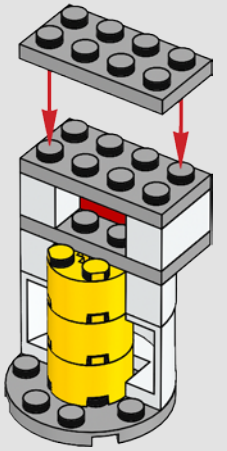

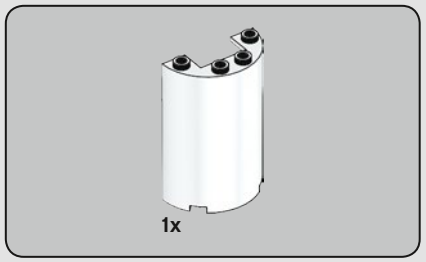

337

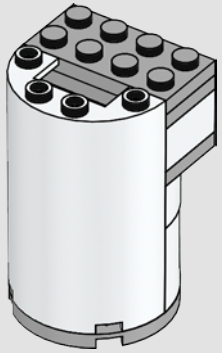

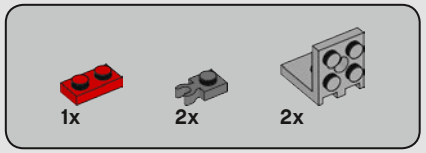

338

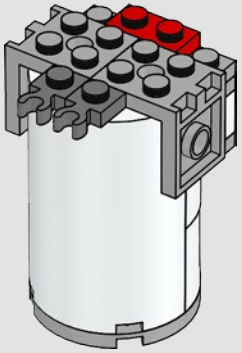

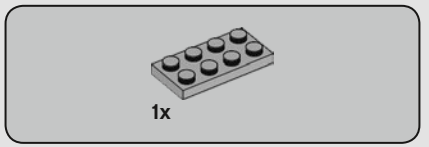

339

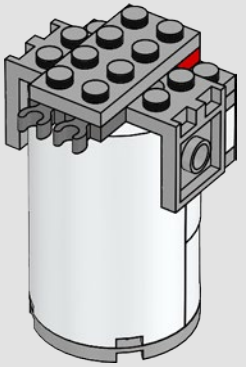

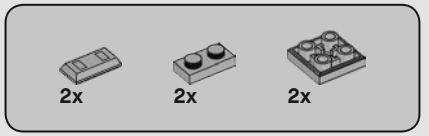

340

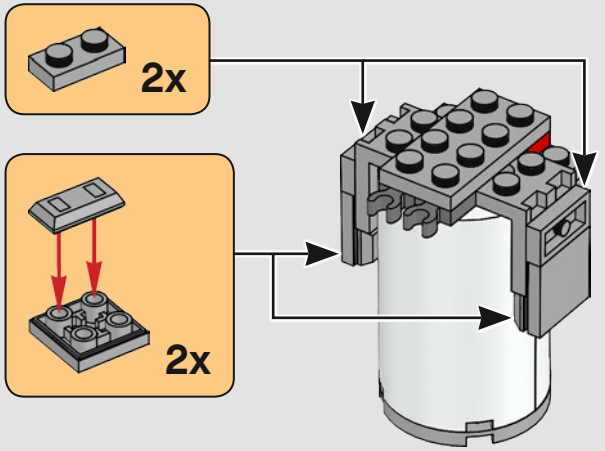

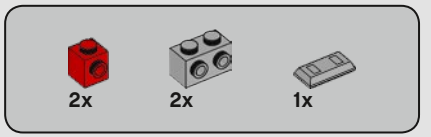

341

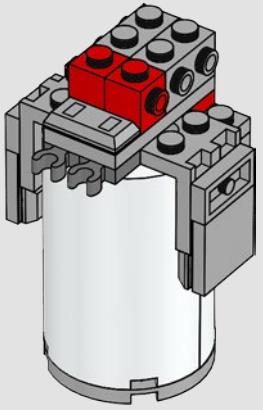

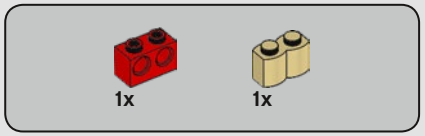

342

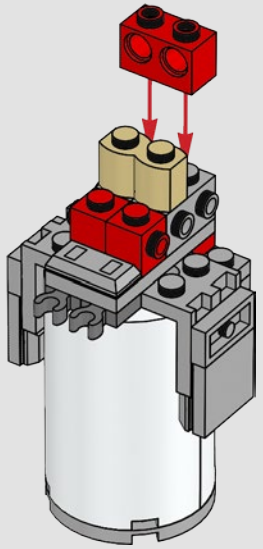

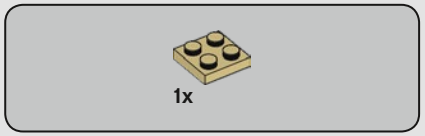

343

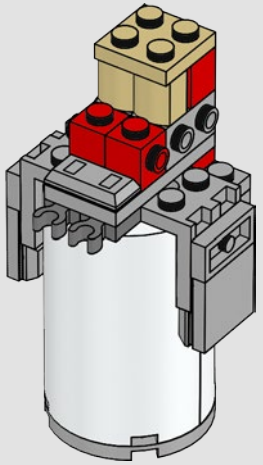

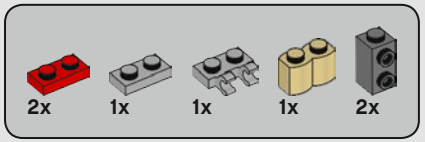

344

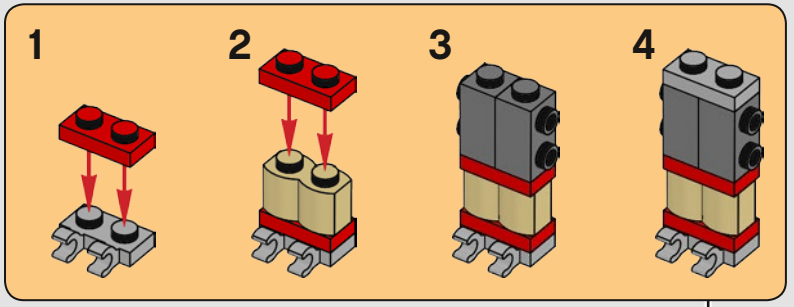

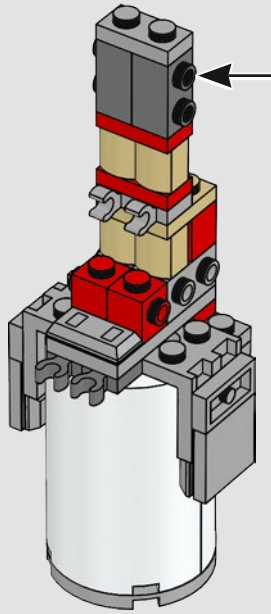

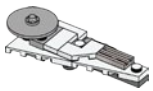

345

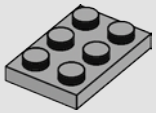

346

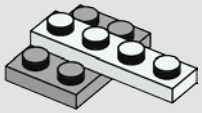

347

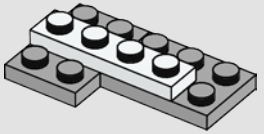

348

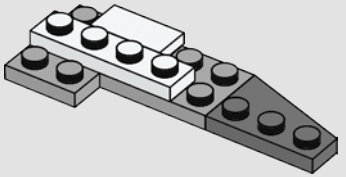

349

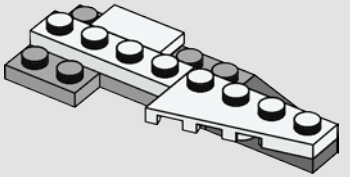

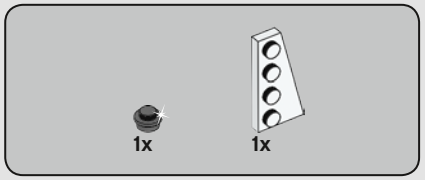

350

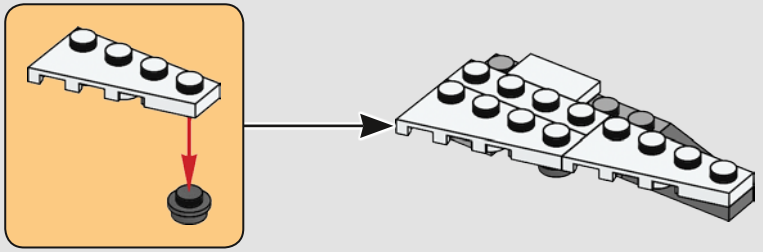

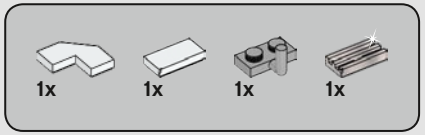

351

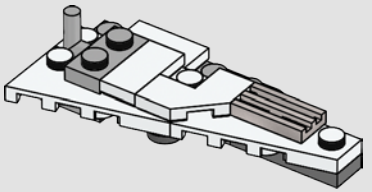

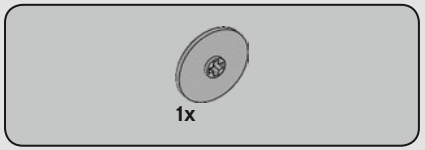

352

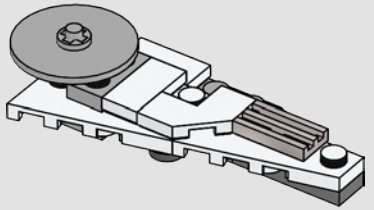

353

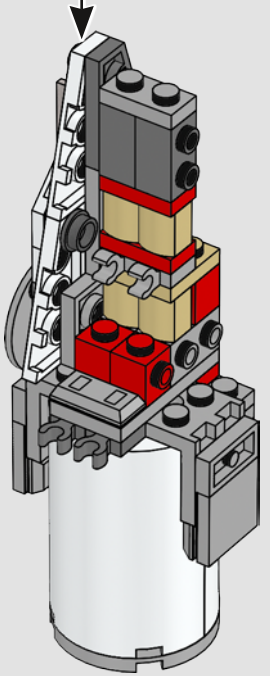

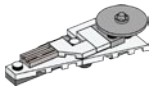

354

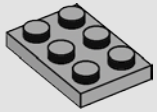

355

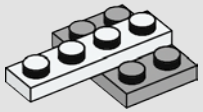

356

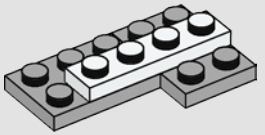

357

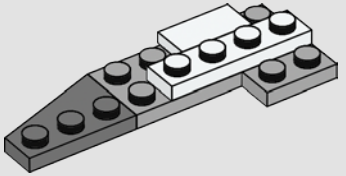

358

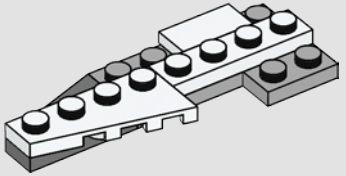

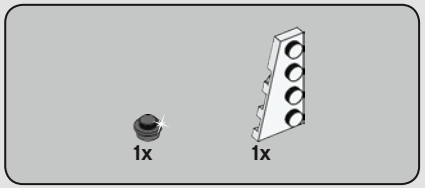

359

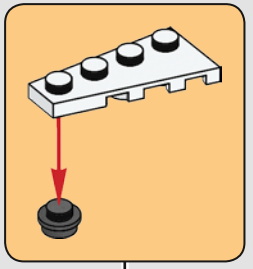

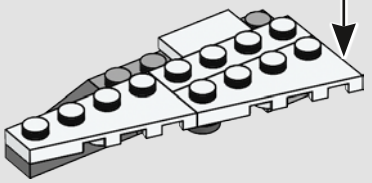

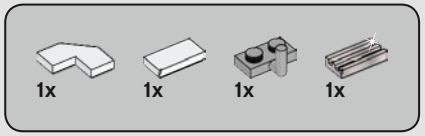

360

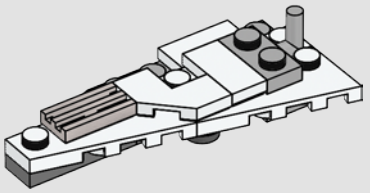

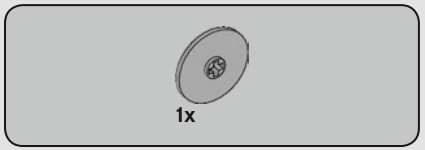

361

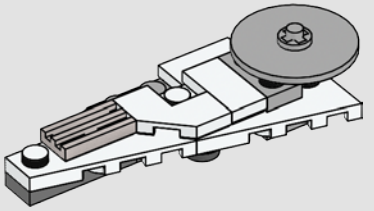

362

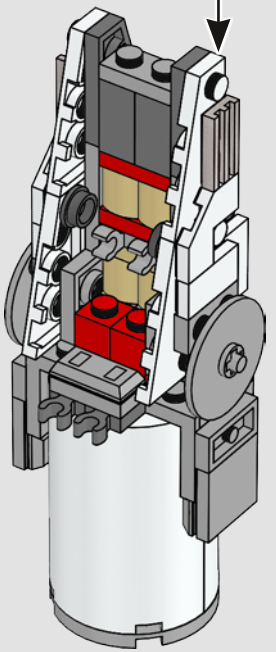

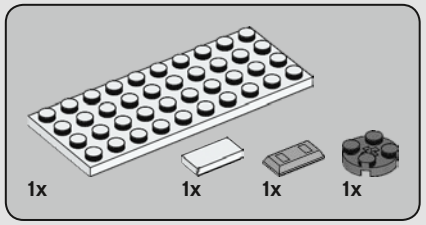

363

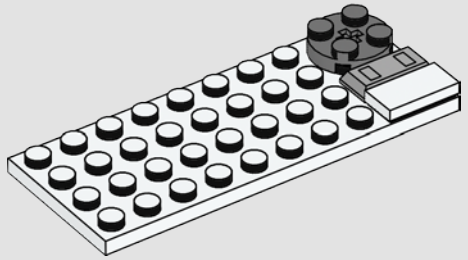

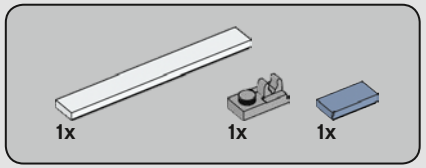

364

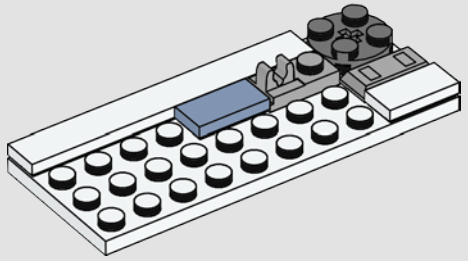

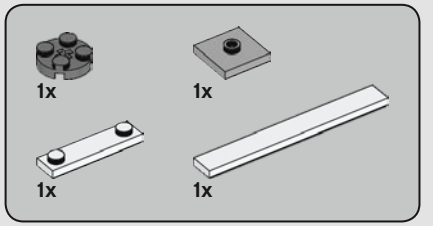

365

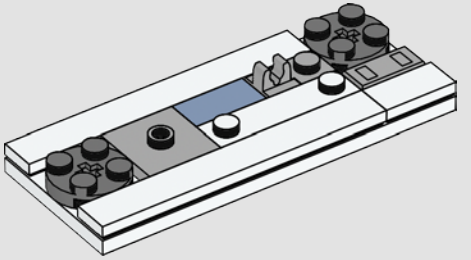

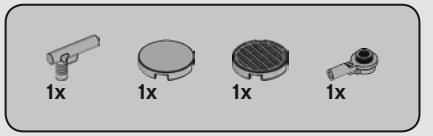

366

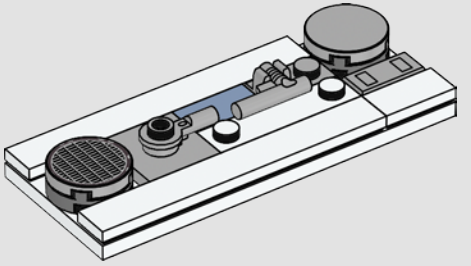

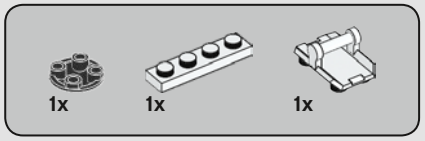

367

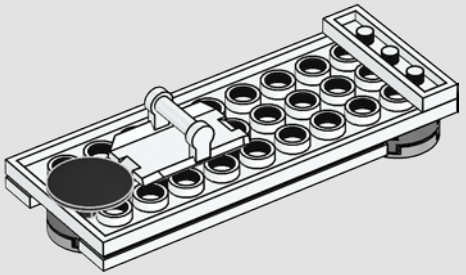

368

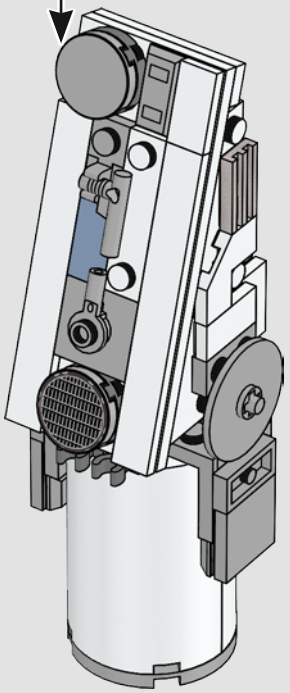

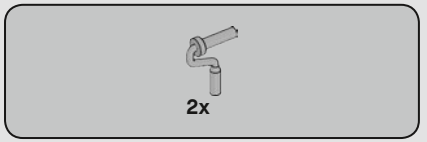

369

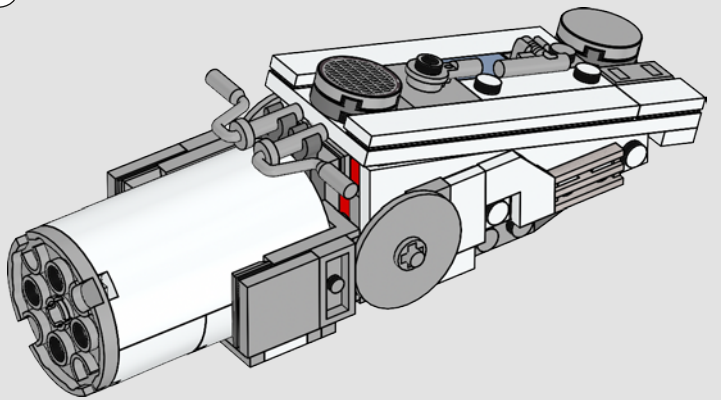

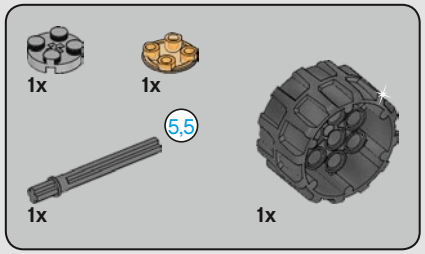

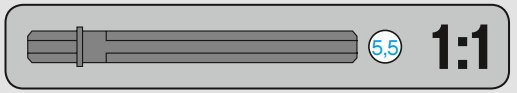

370

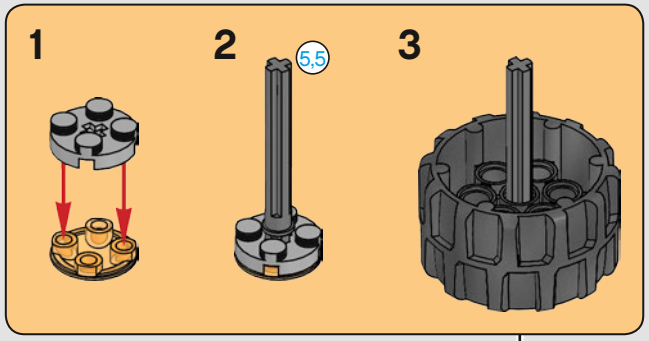

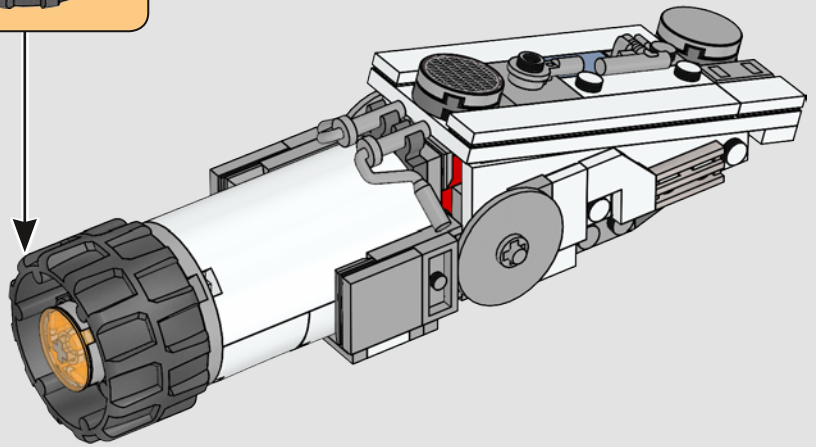

371

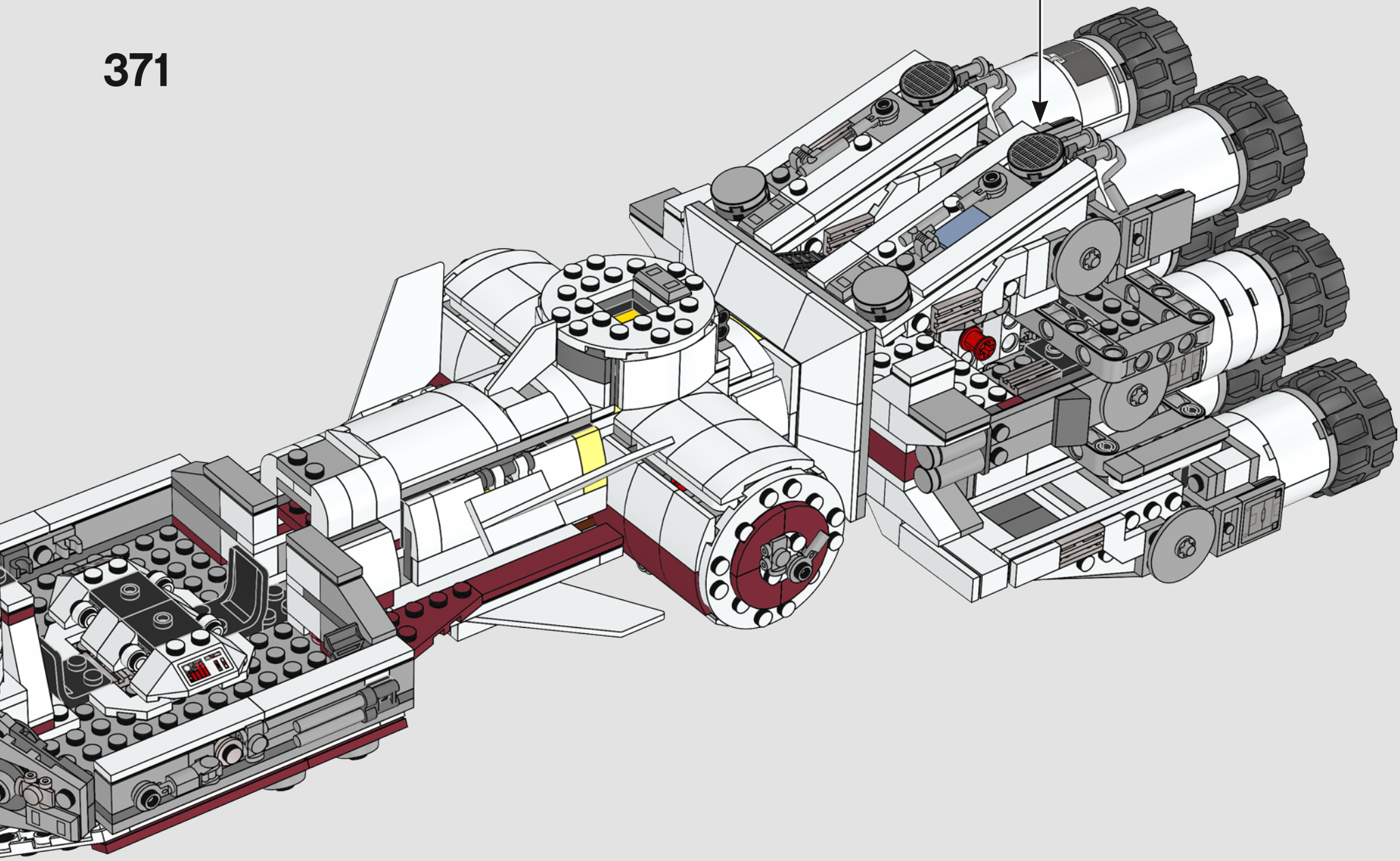

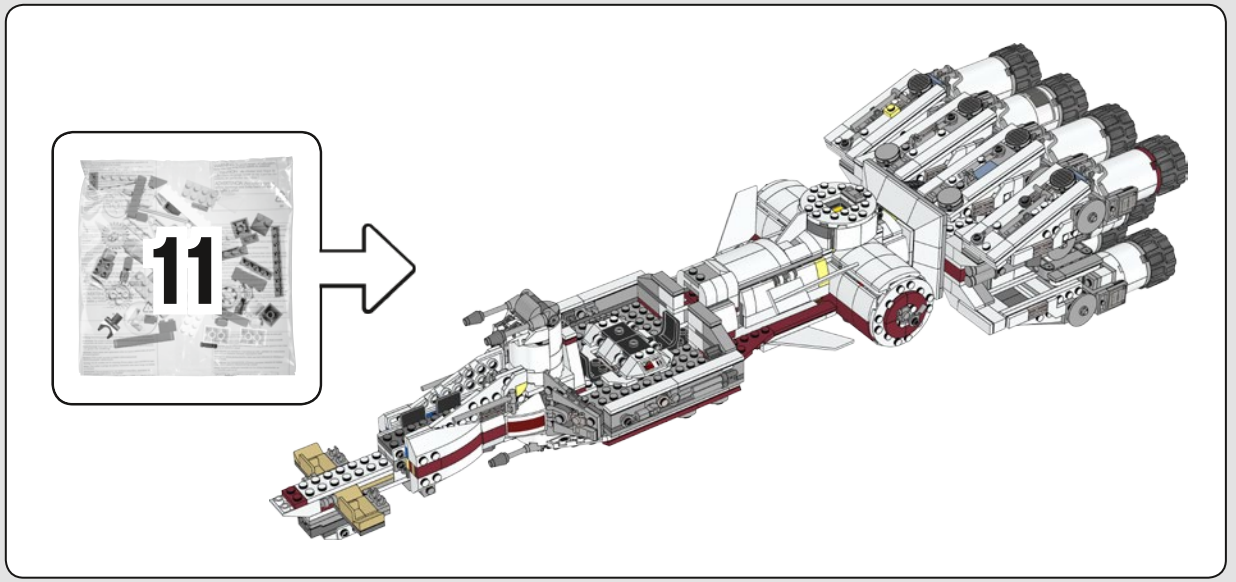

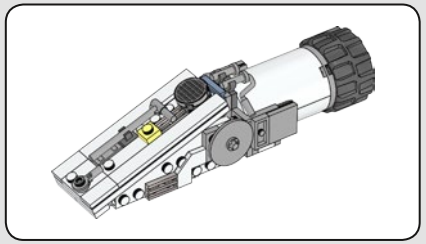

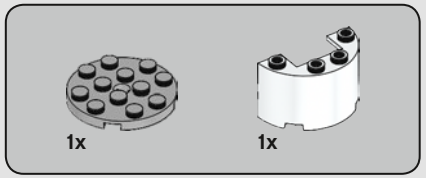

372

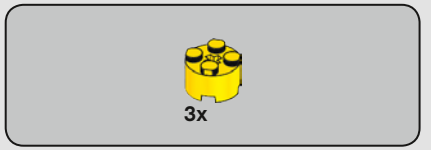

373

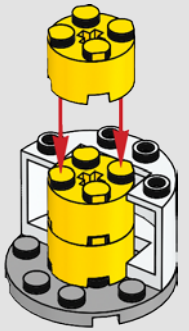

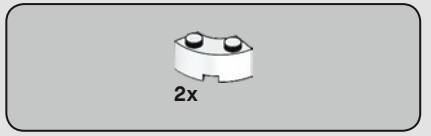

374

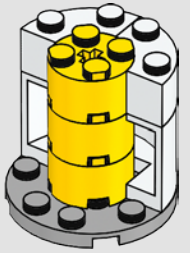

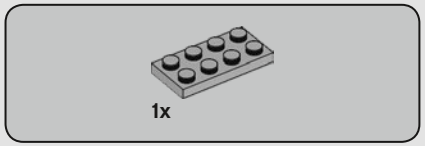

375

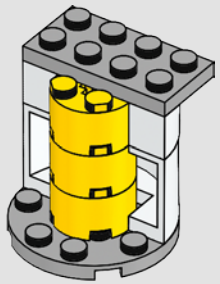

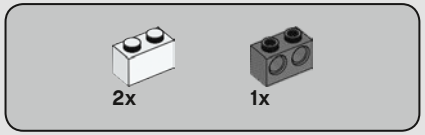

376

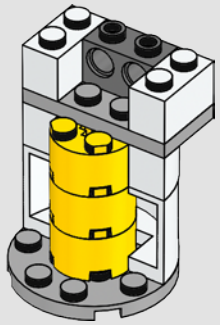

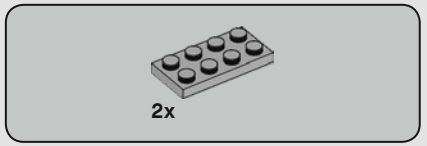

377

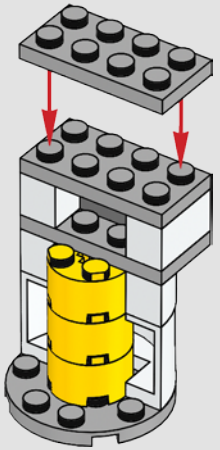

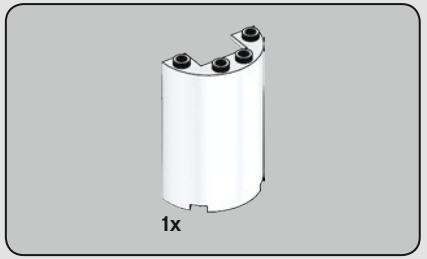

378

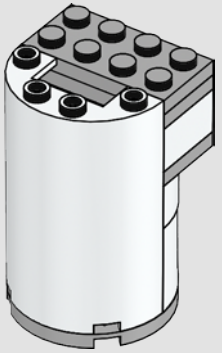

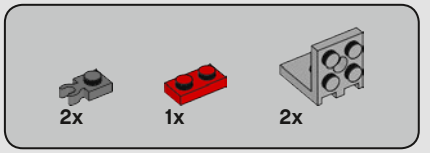

379

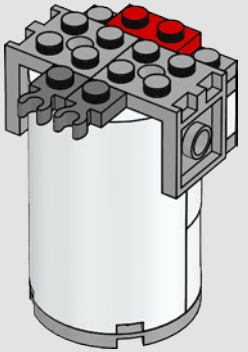

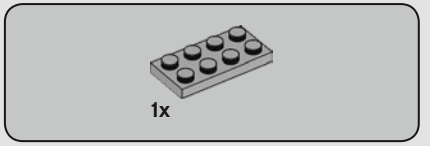

380

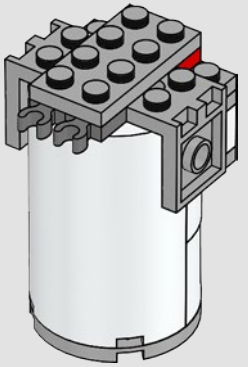

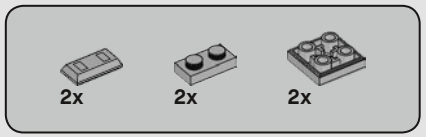

381

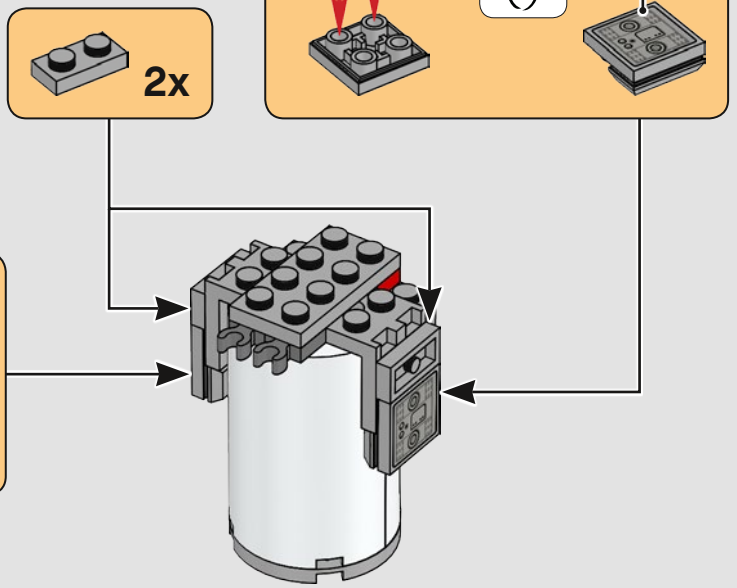

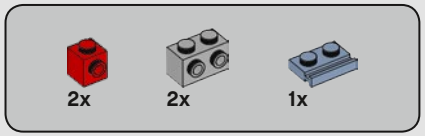

382

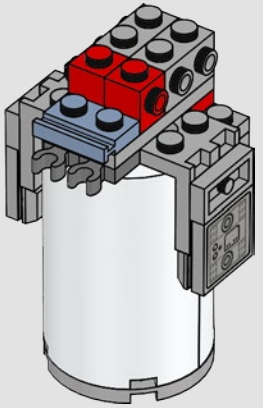

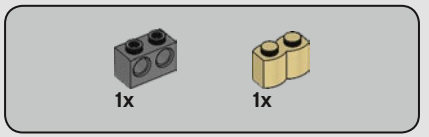

383

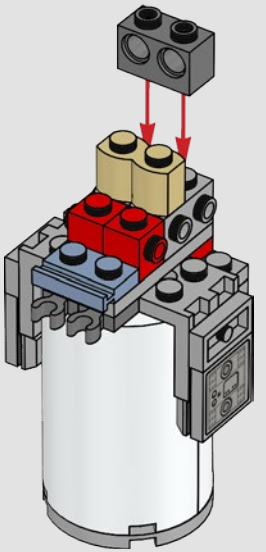

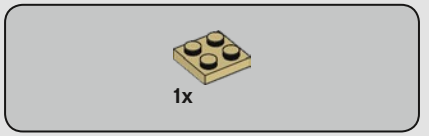

384

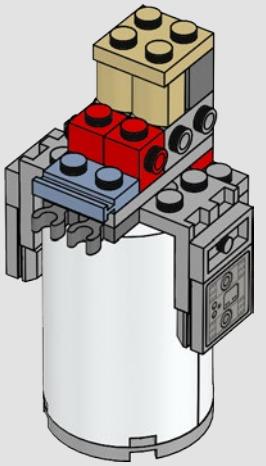

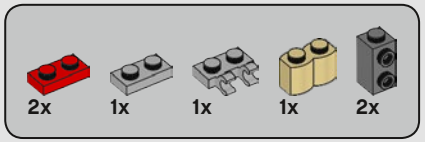

385

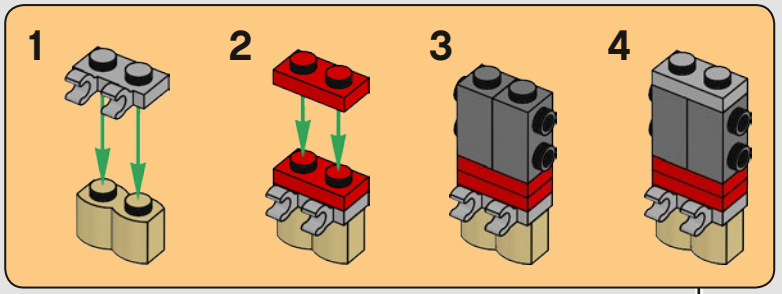

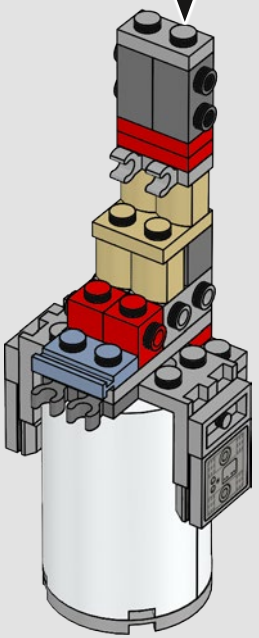

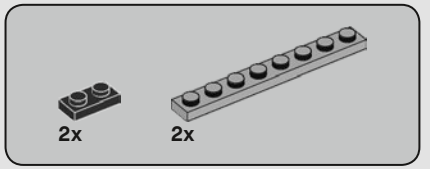

386

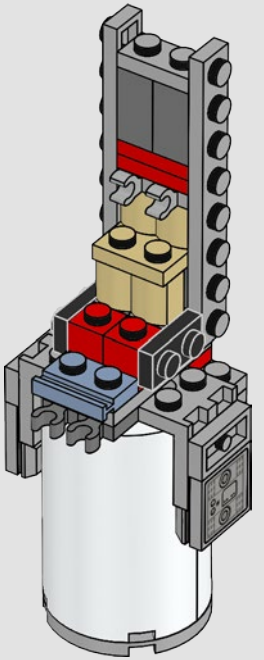

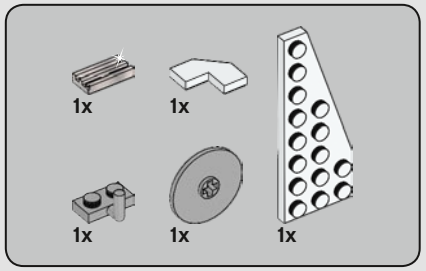

387

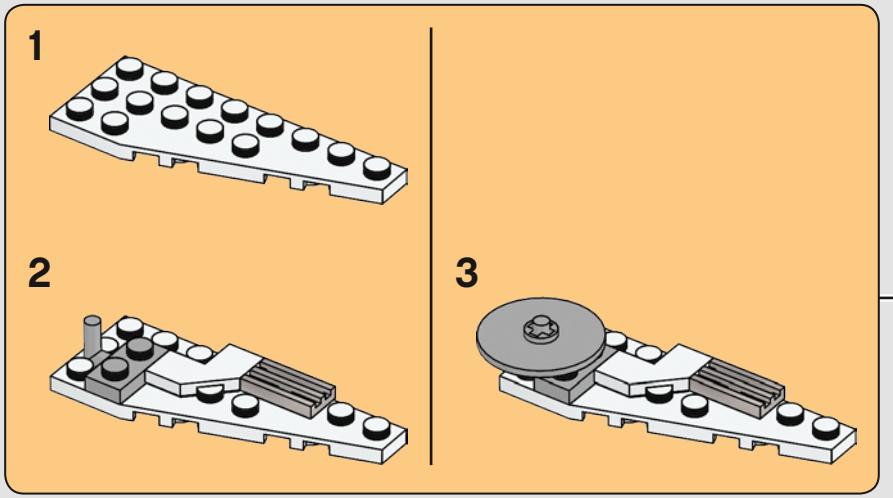

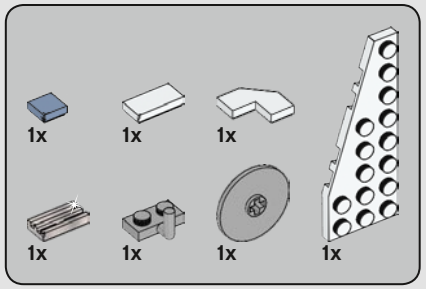

388

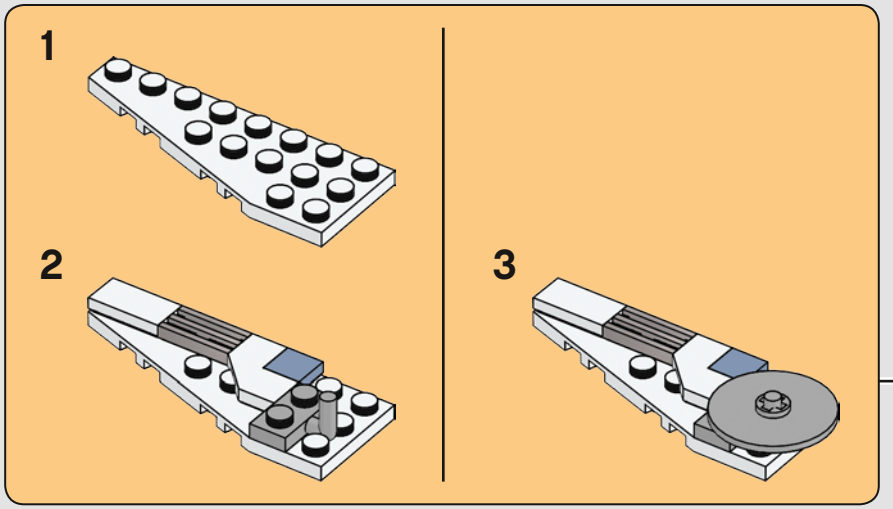

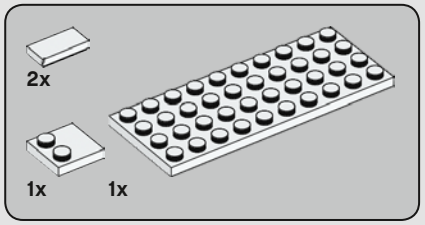

389

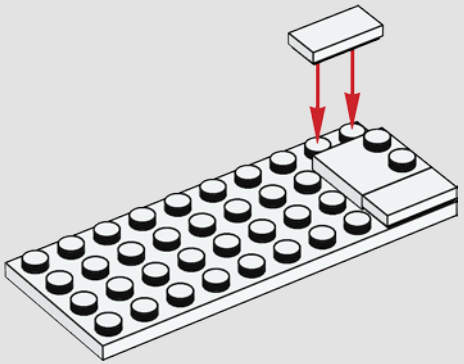

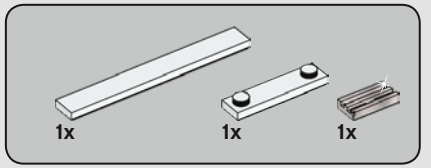

390

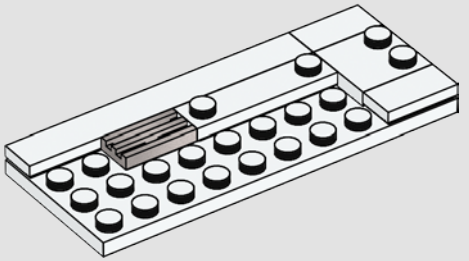

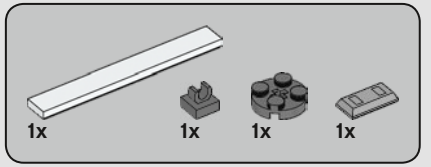

391

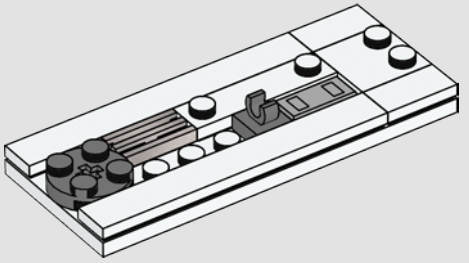

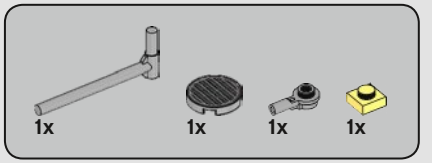

392

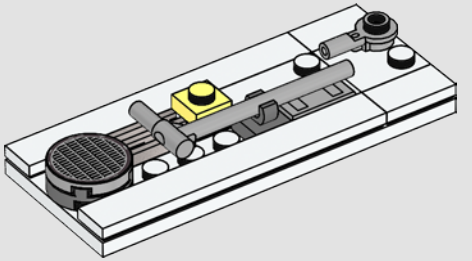

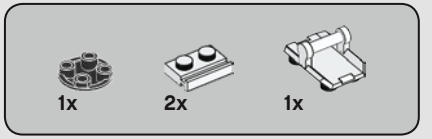

393

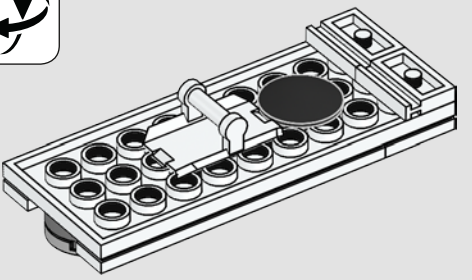

394

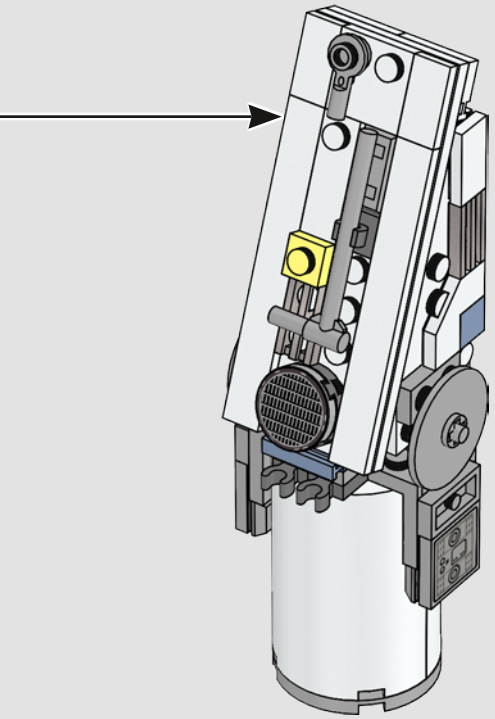

395

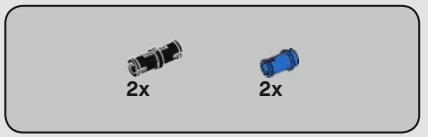

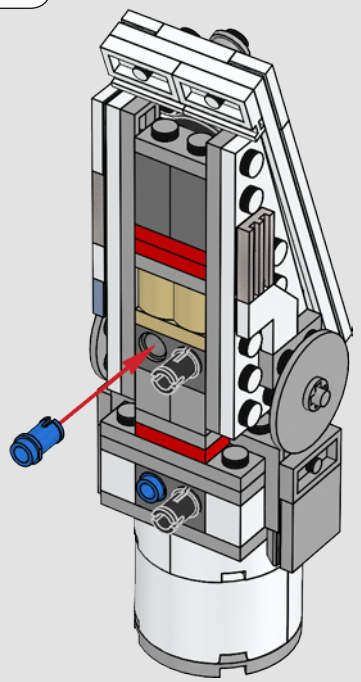

396

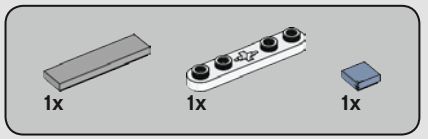

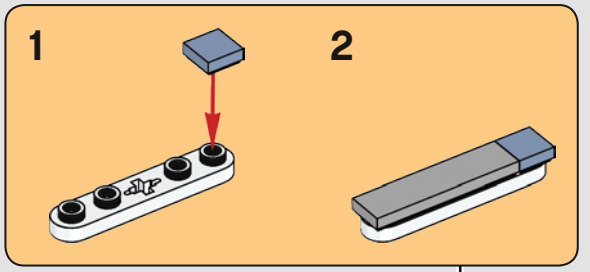

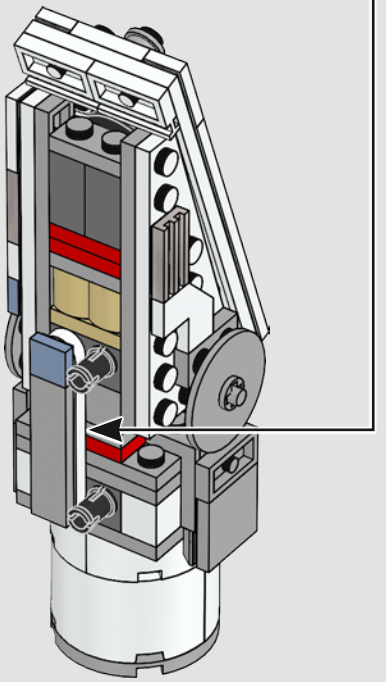

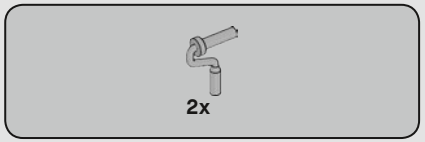

397

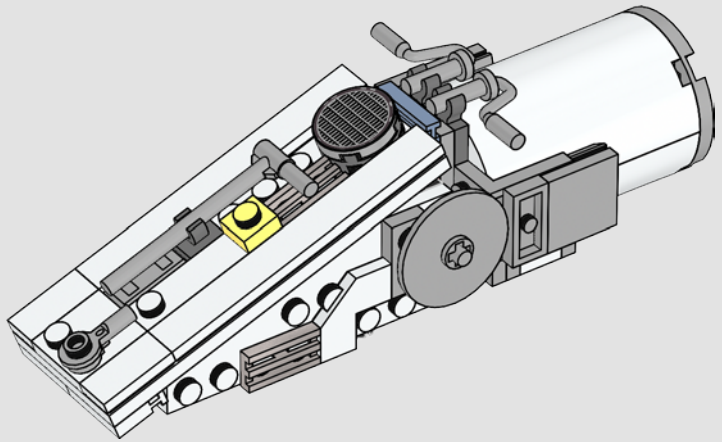

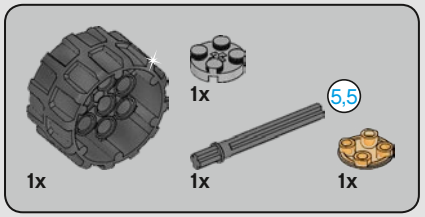

398

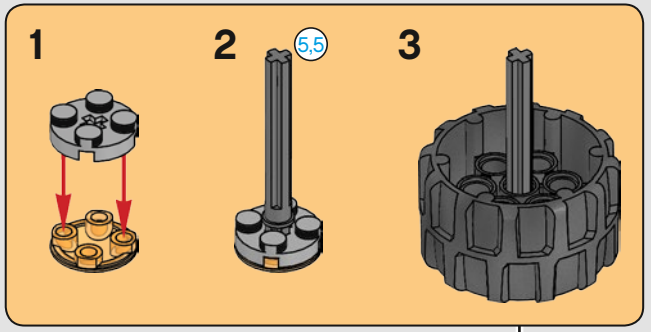

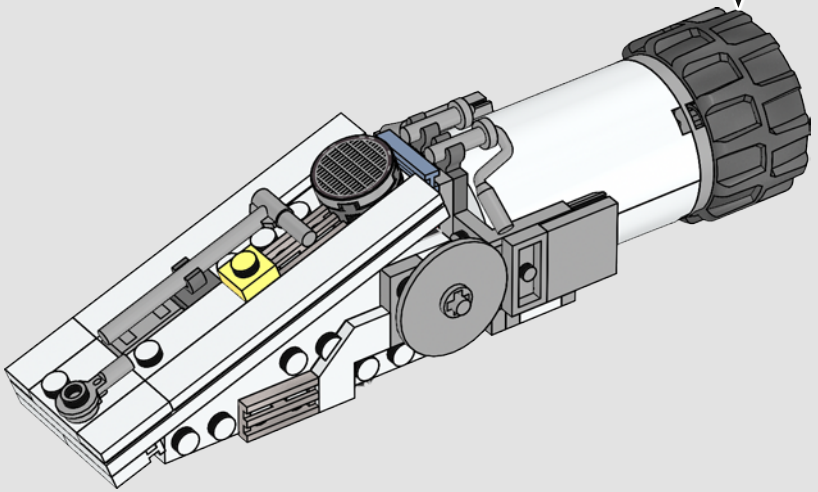

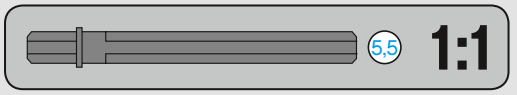

399

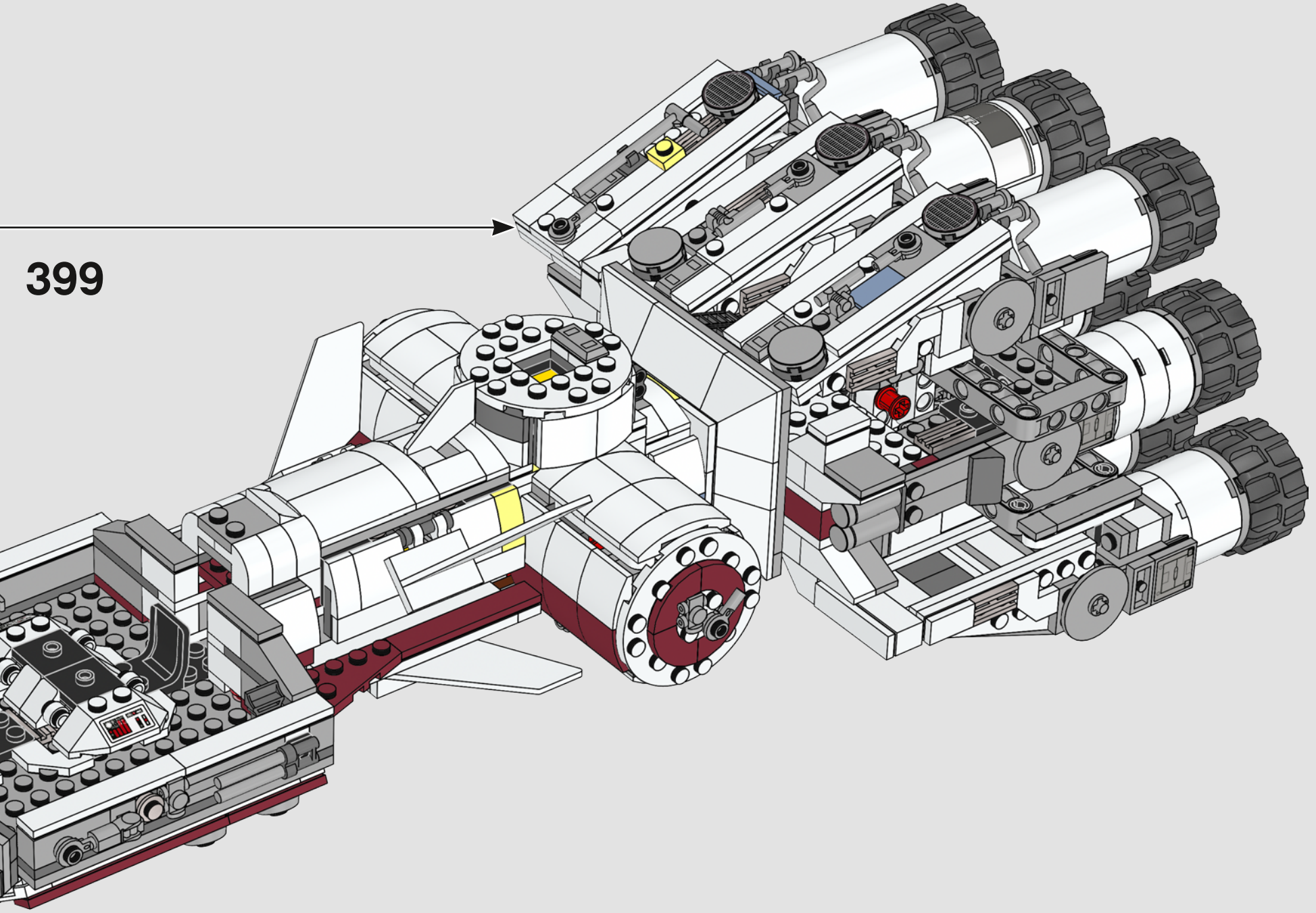

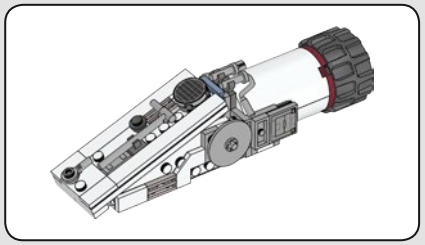

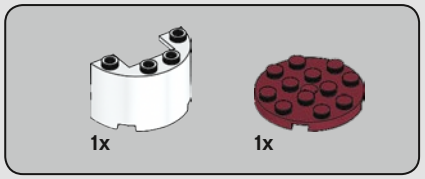

400

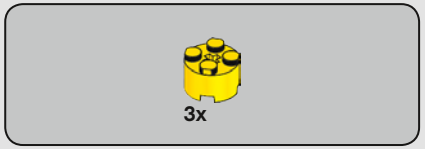

401

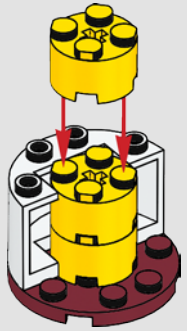

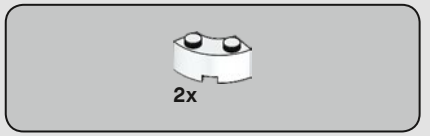

402

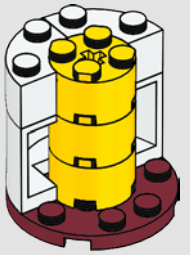

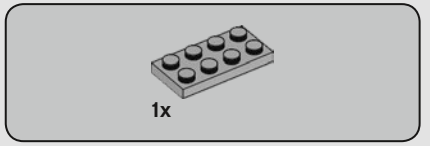

403

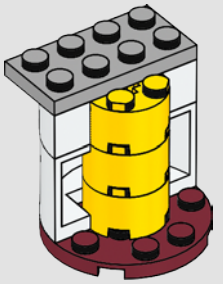

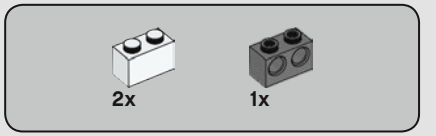

404

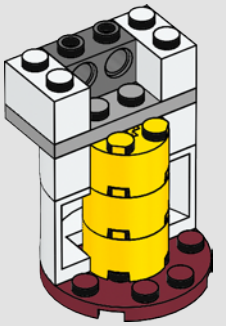

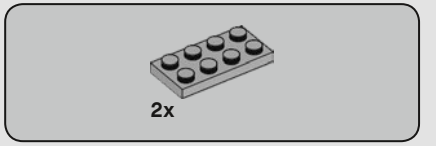

405

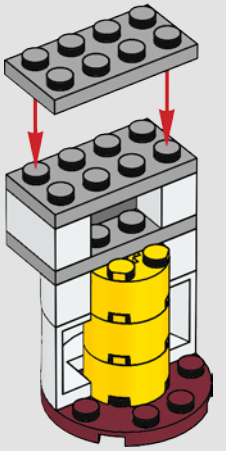

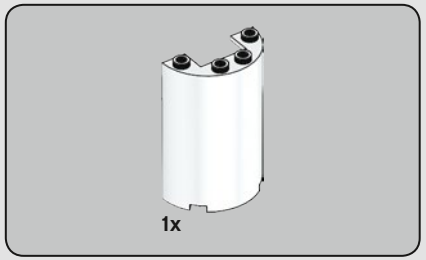

406

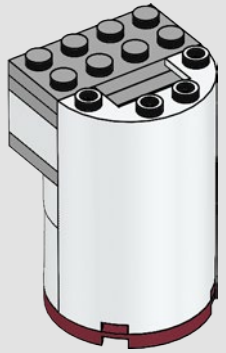

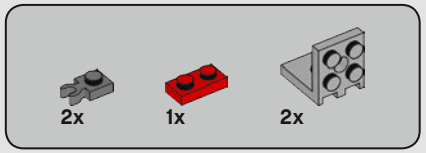

407

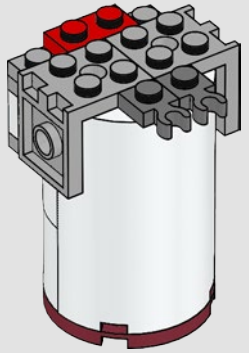

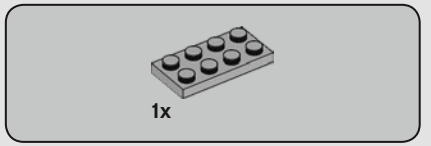

408

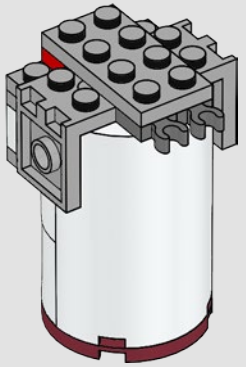

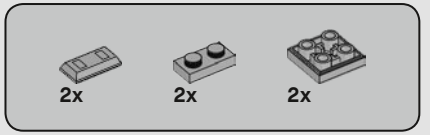

409

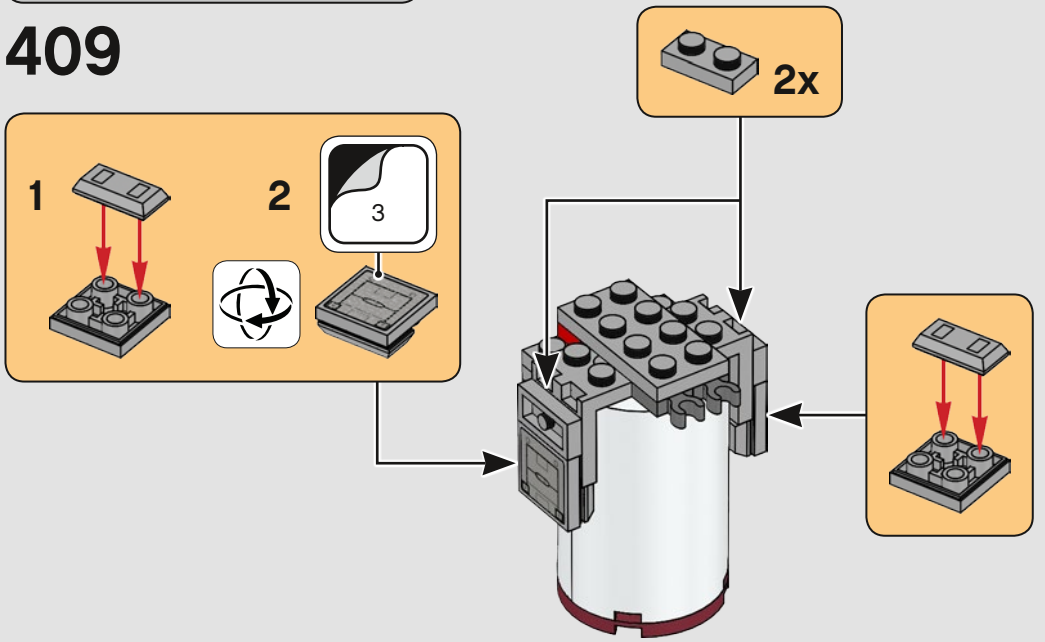

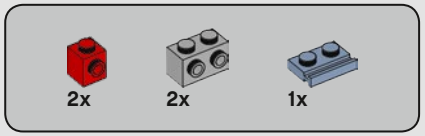

410

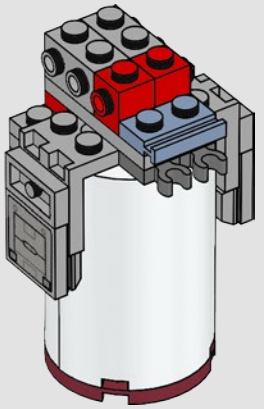

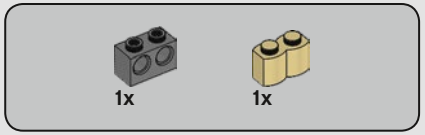

411

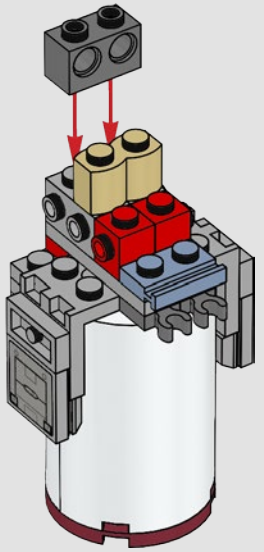

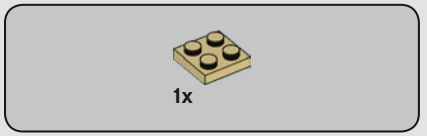

412

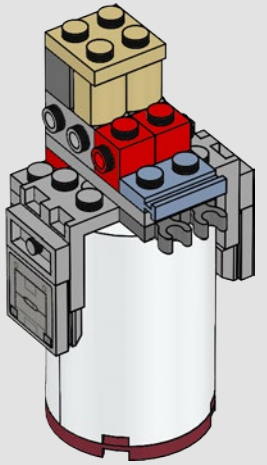

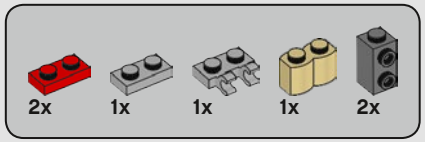

413

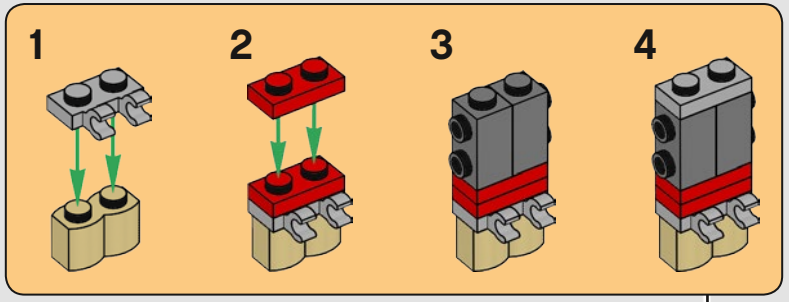

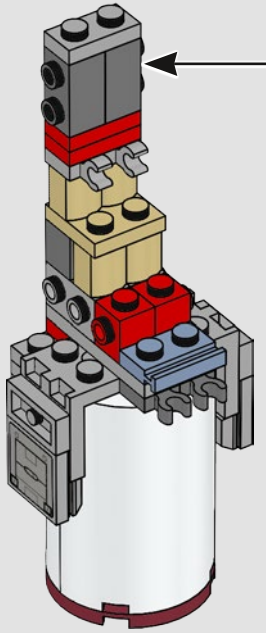

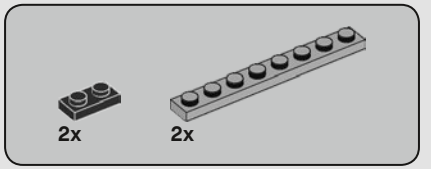

414

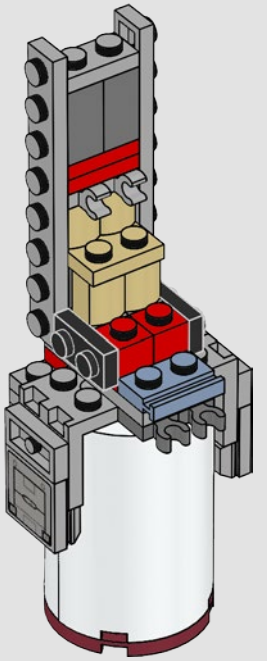

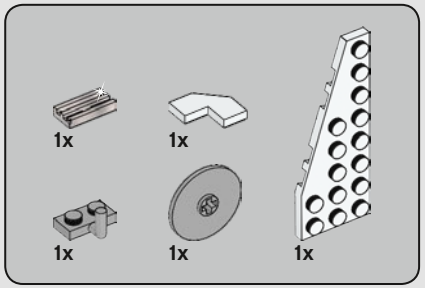

415

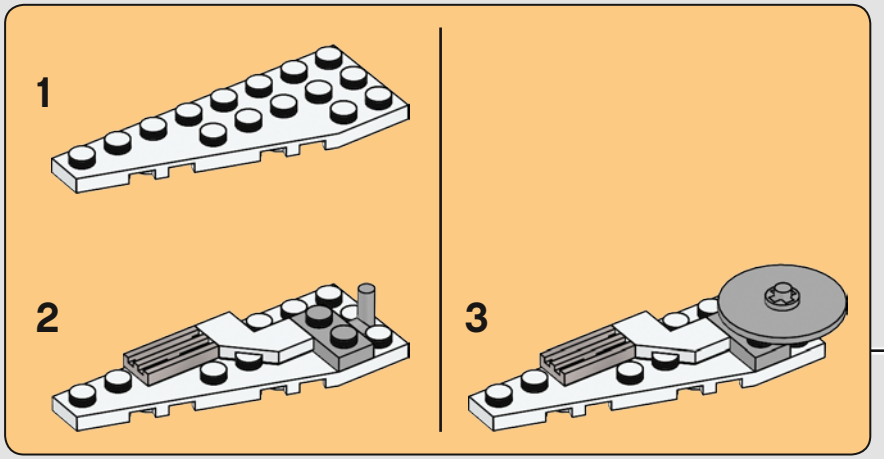

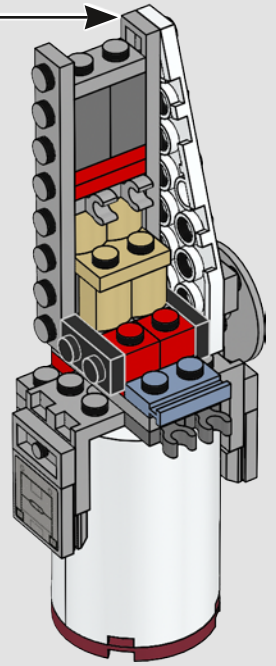

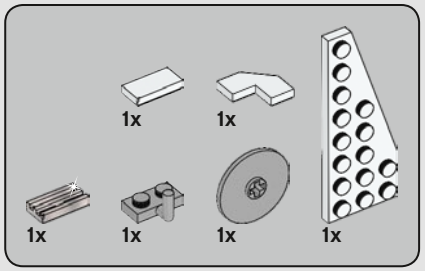

416

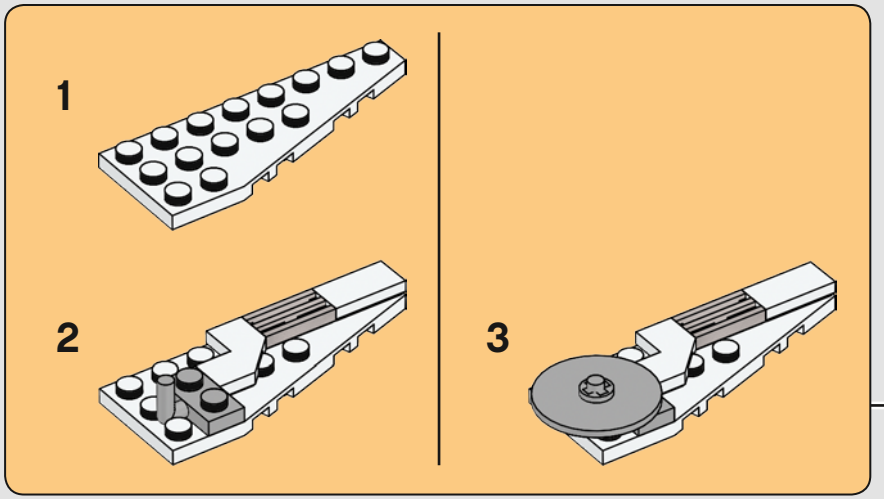

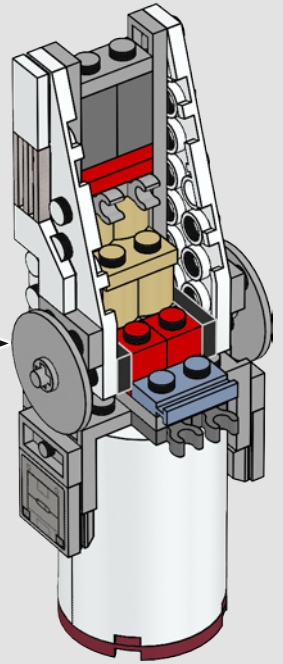

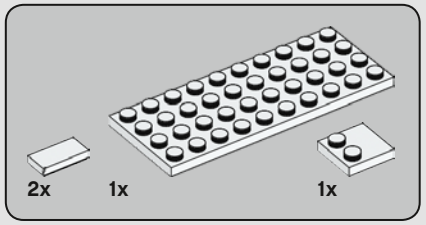

417

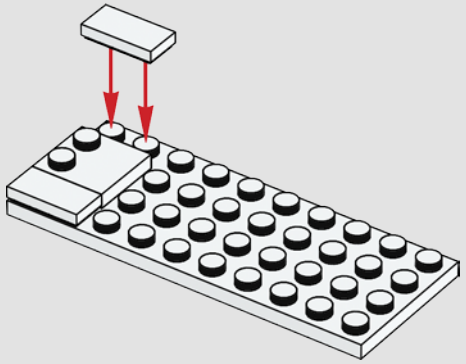

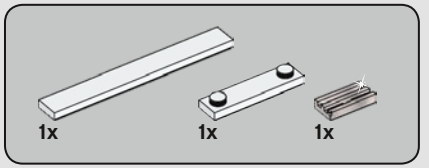

418

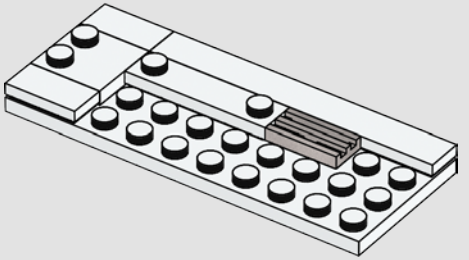

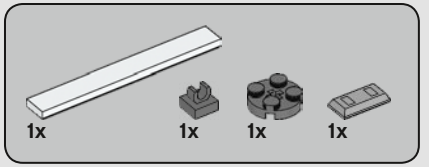

419

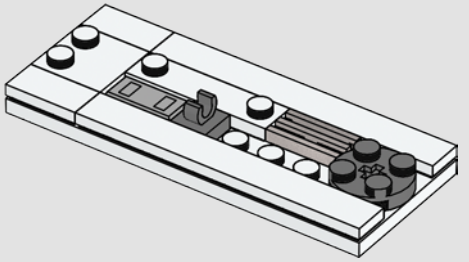

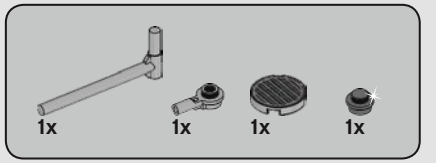

420

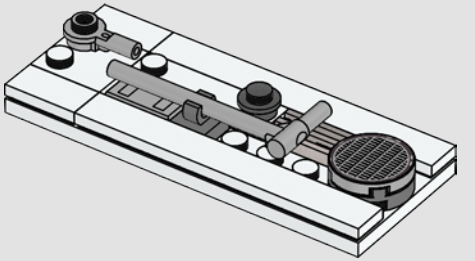

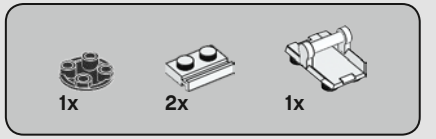

421

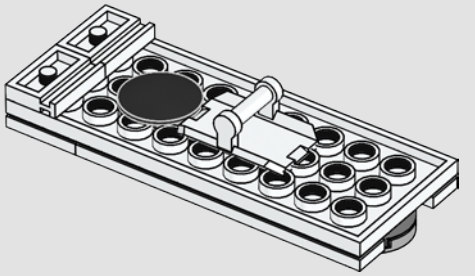

422

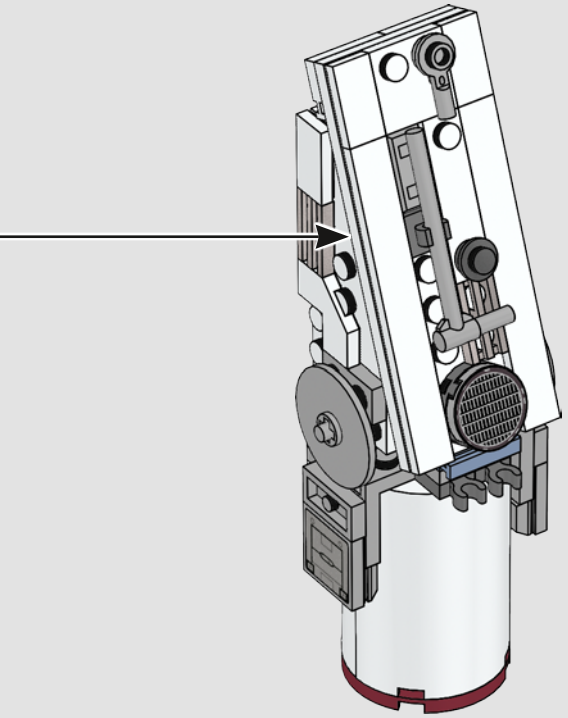

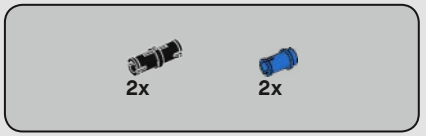

423

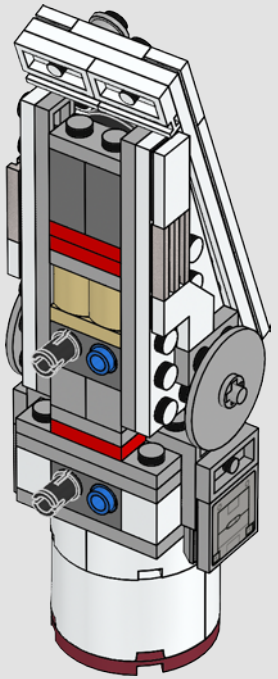

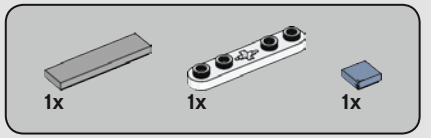

424

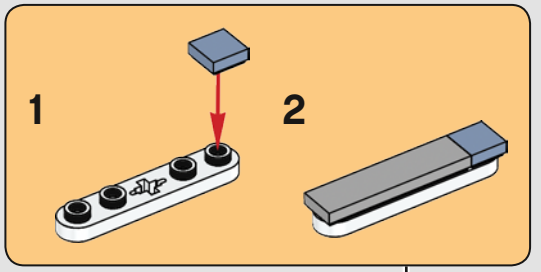

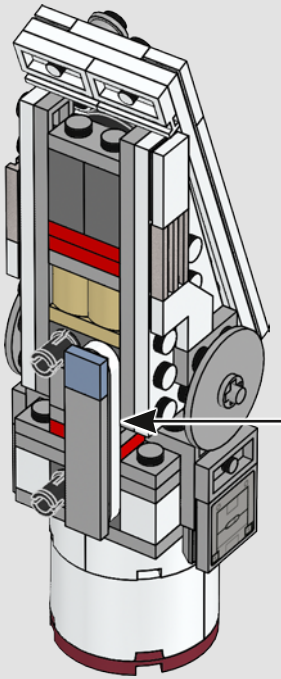

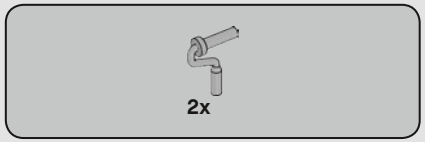

425

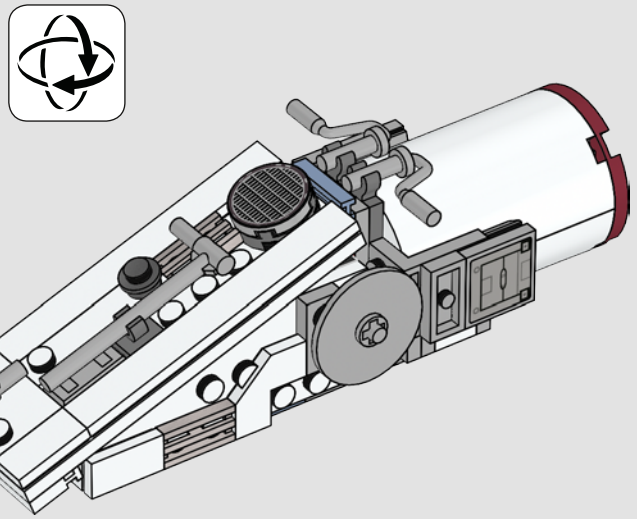

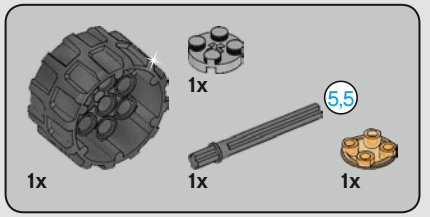

426

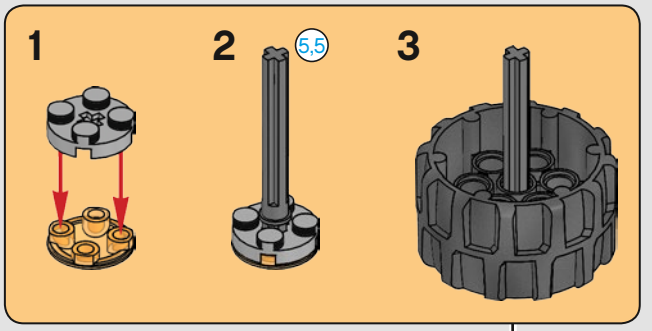

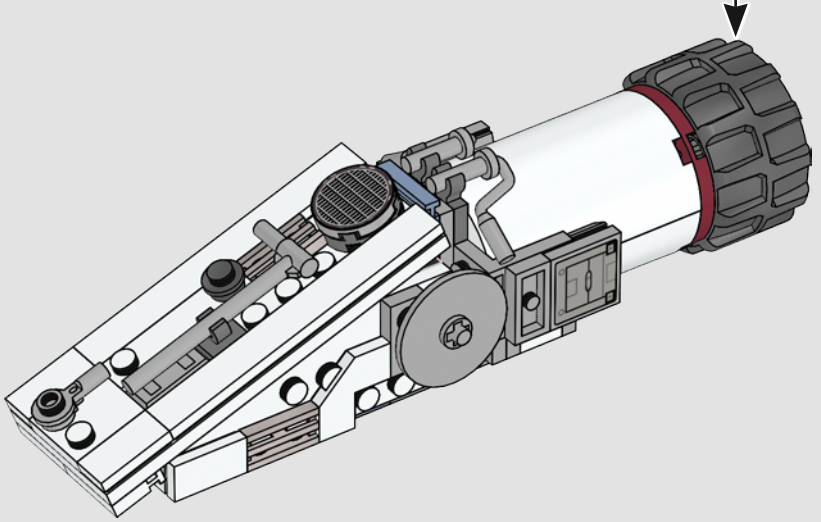

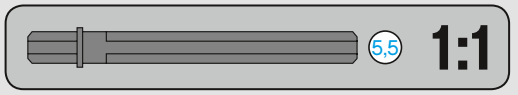

427

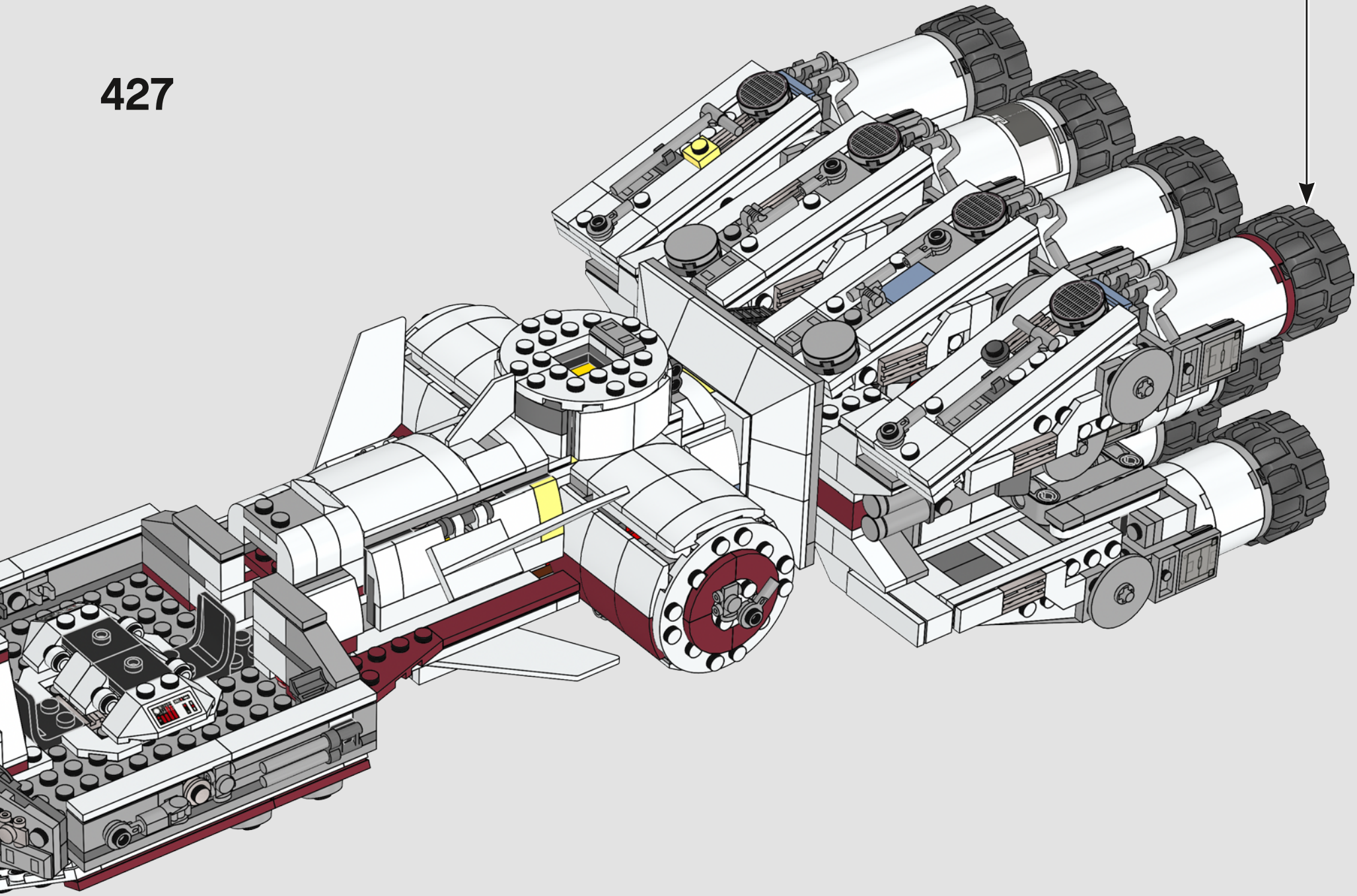

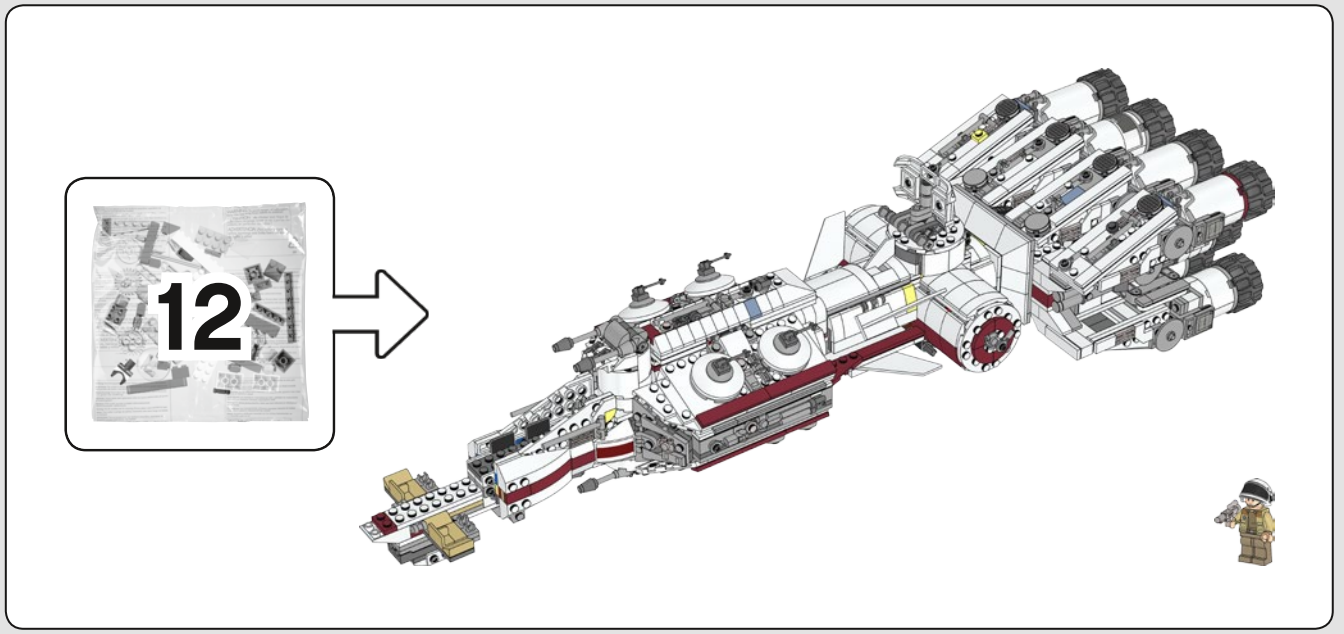
12

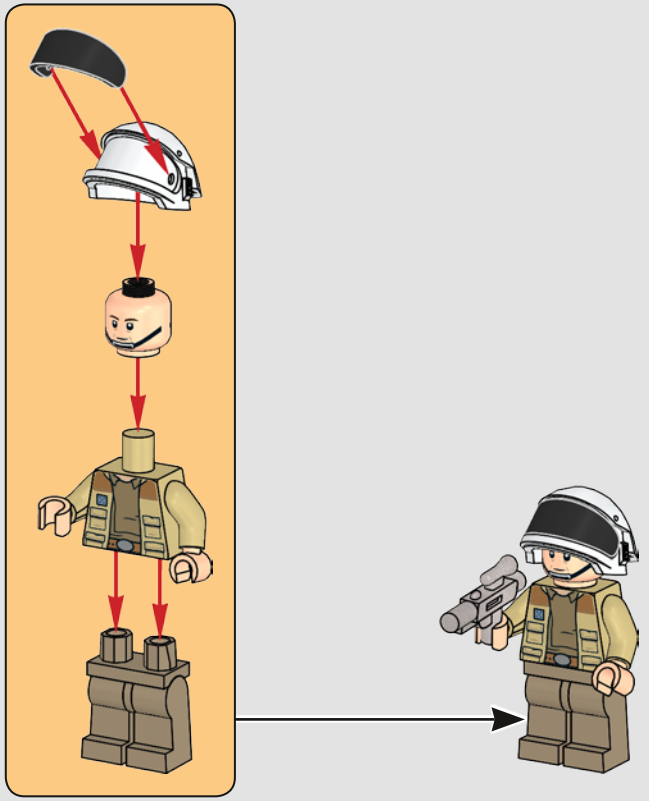

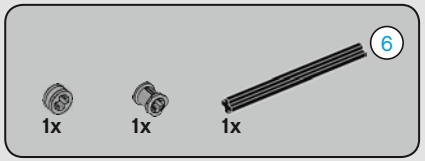

428

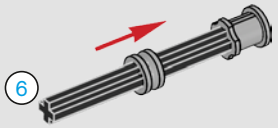

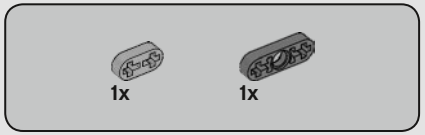

429

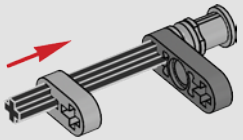

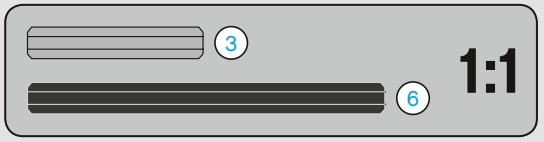

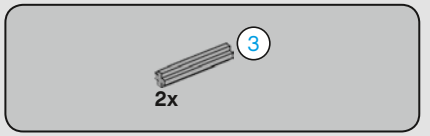

430

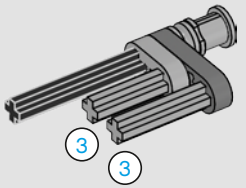

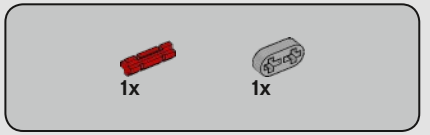

431

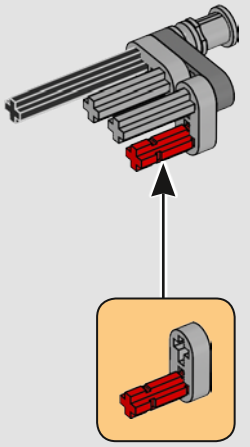

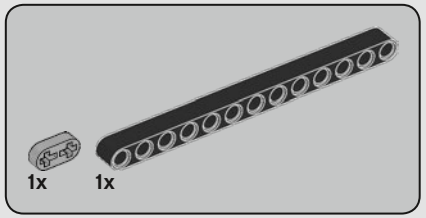

432

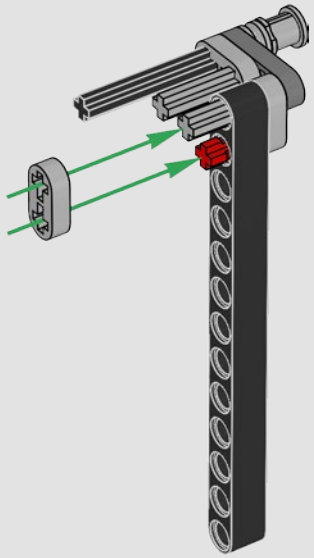

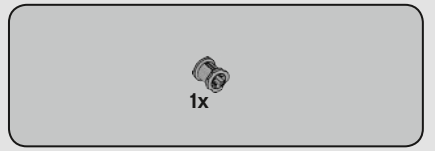

433

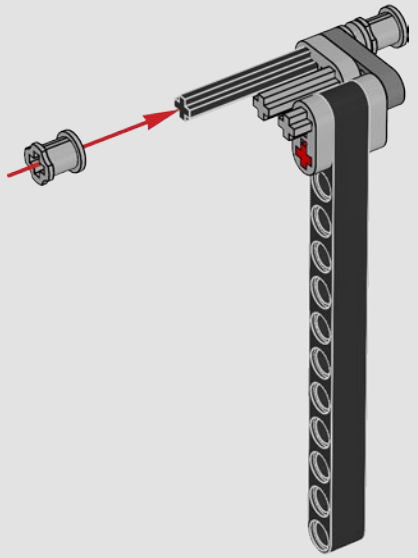

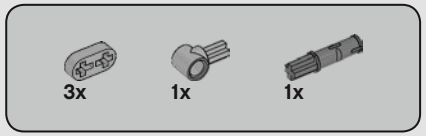

434

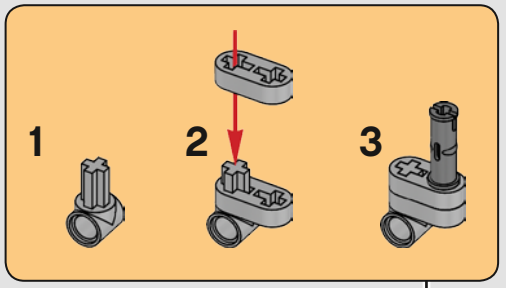

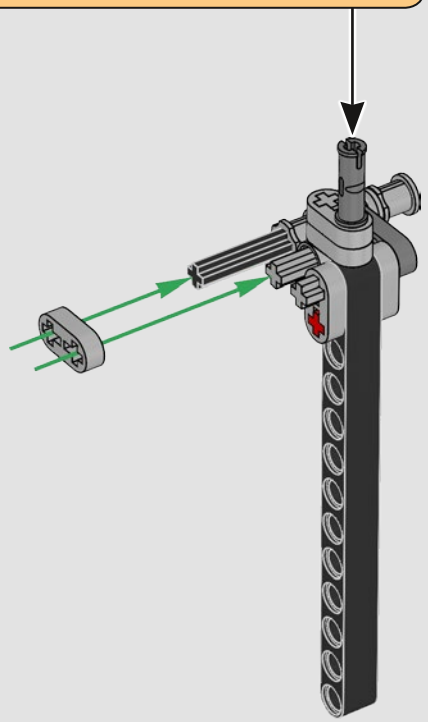

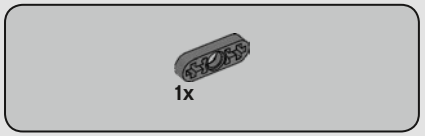

435

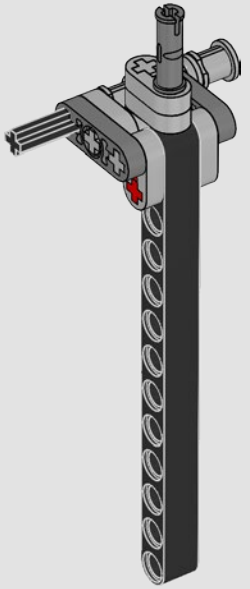

436

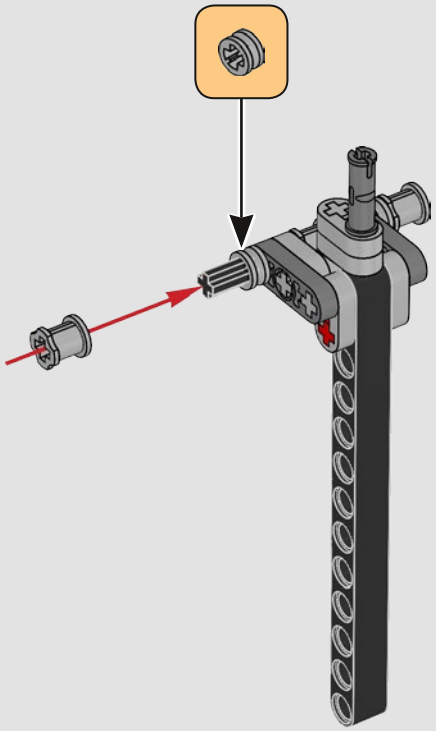

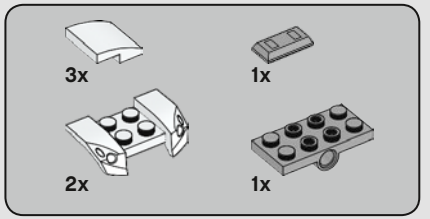

437

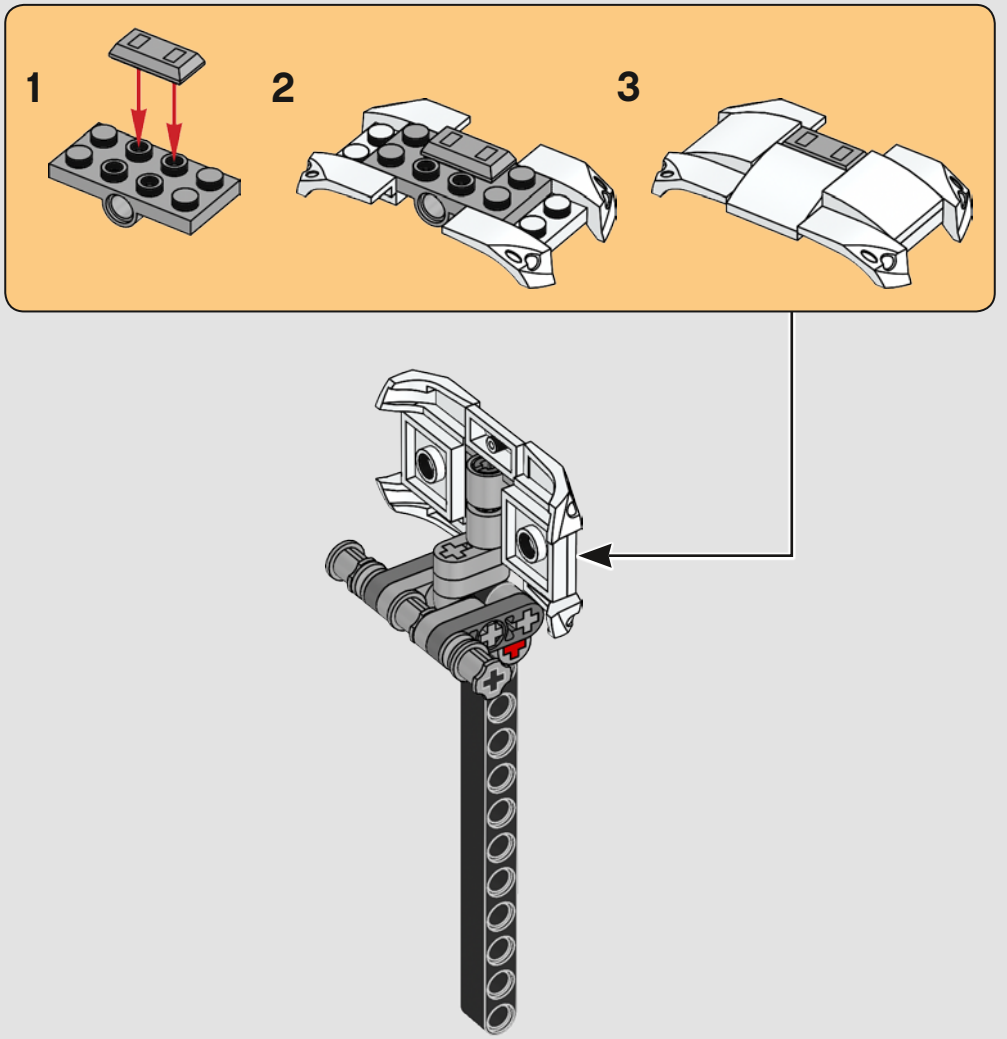

438

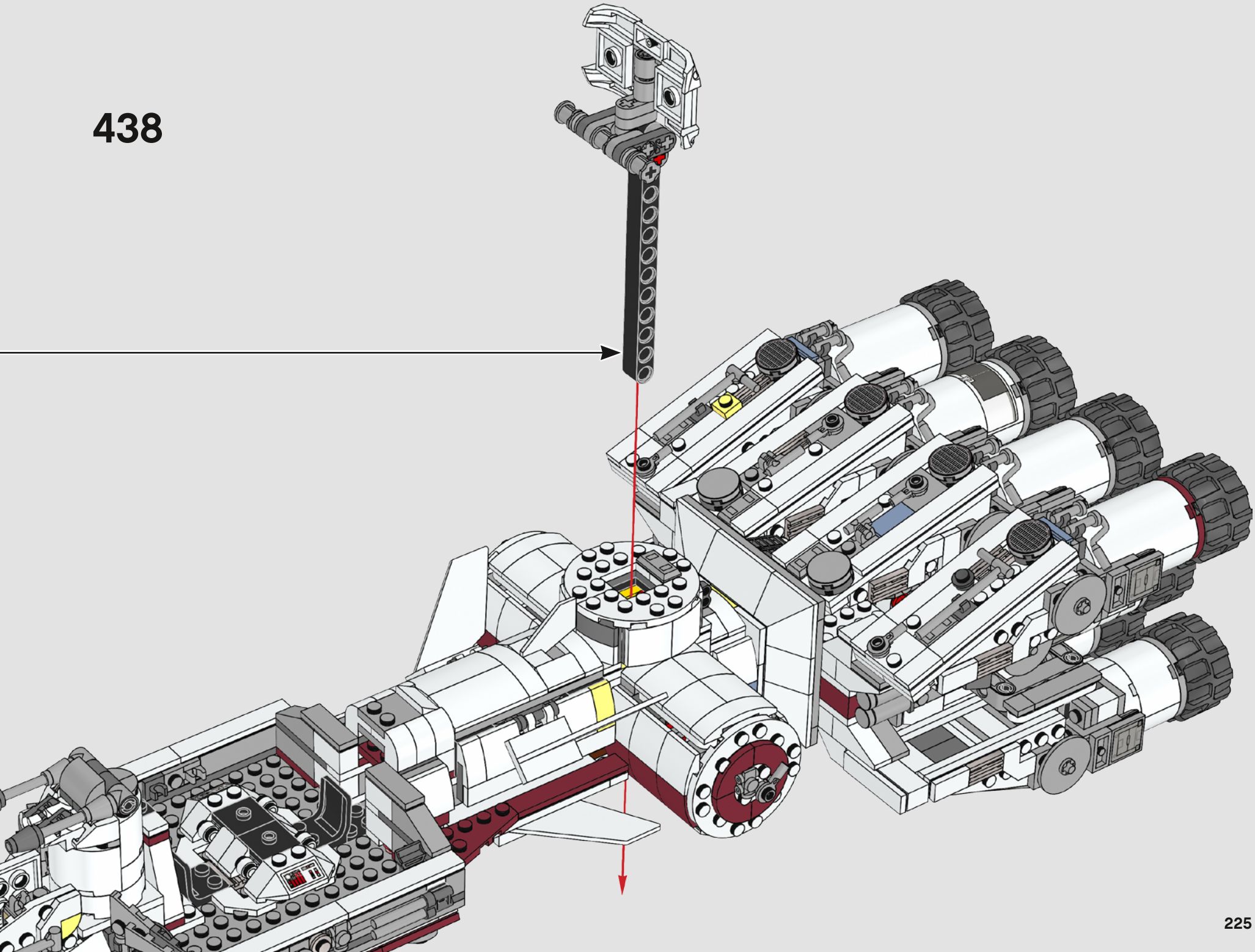

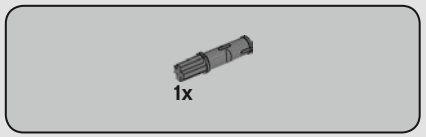

439

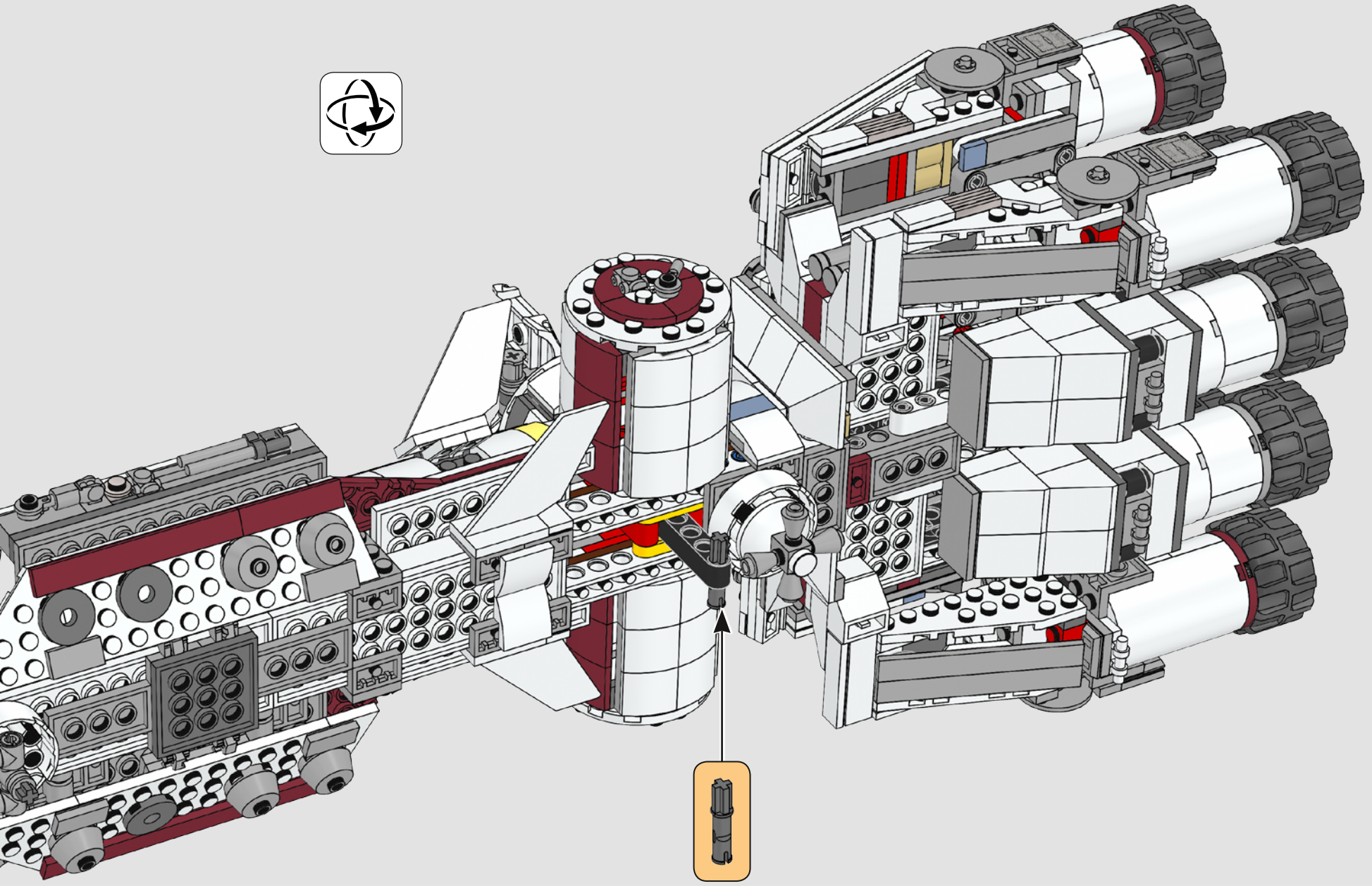

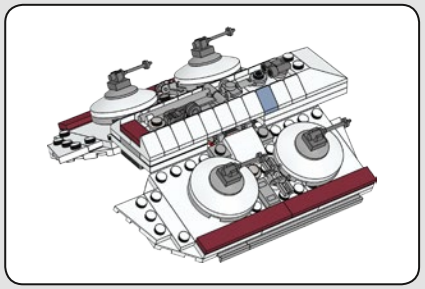

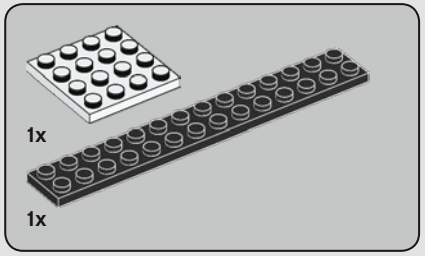

440

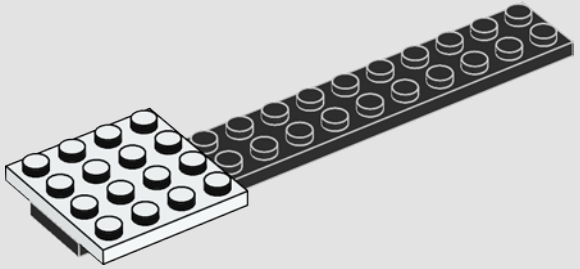

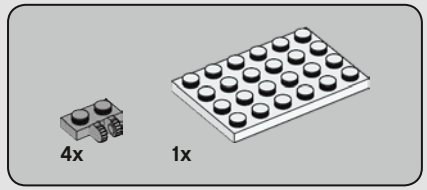

441

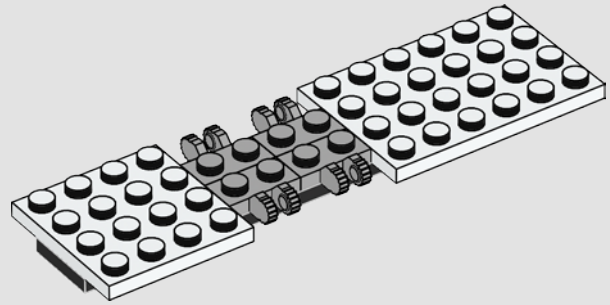

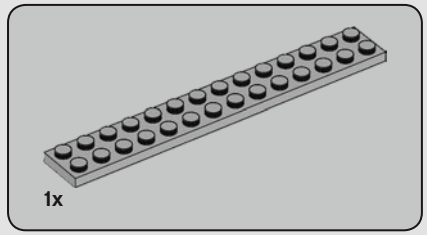

442

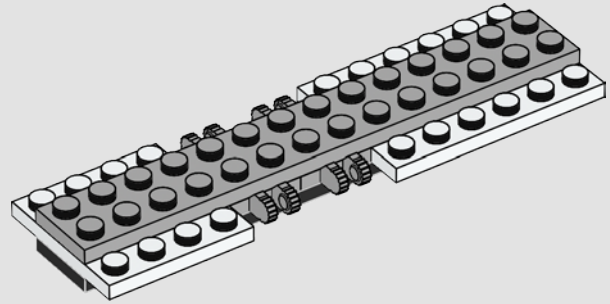

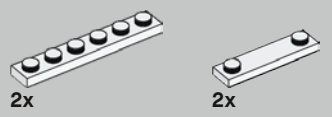

443

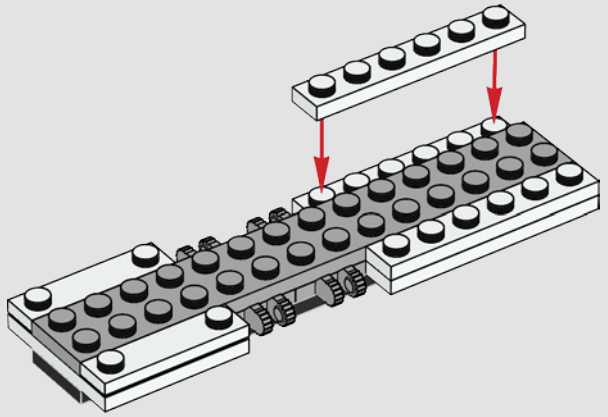

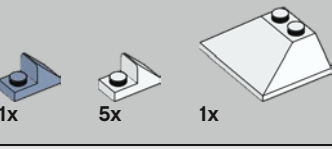

444

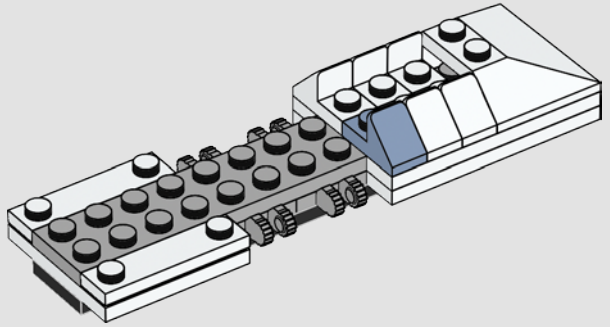

445

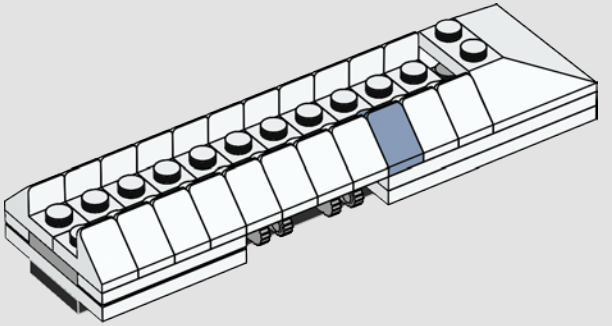

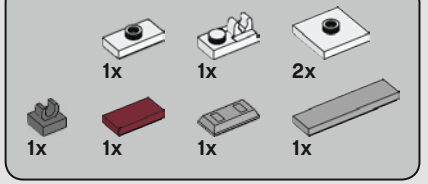

446

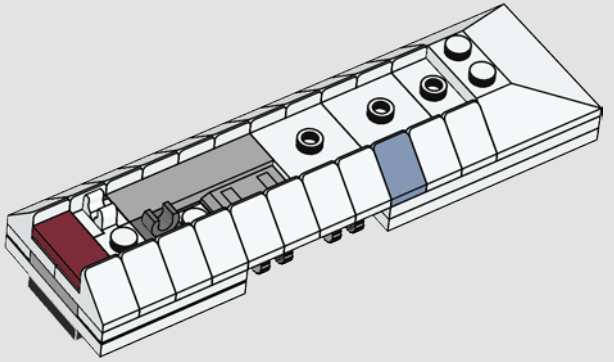

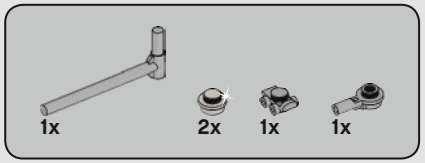

447

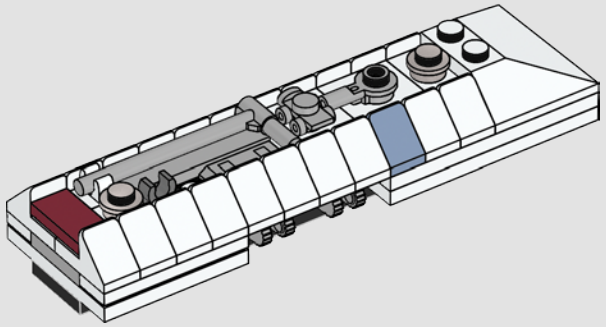

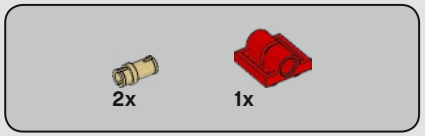

448

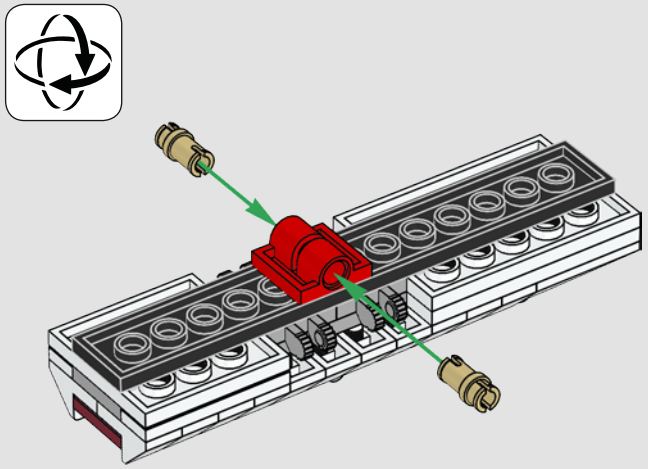

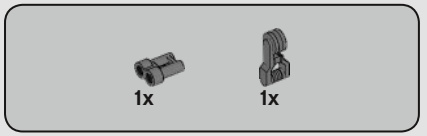

449

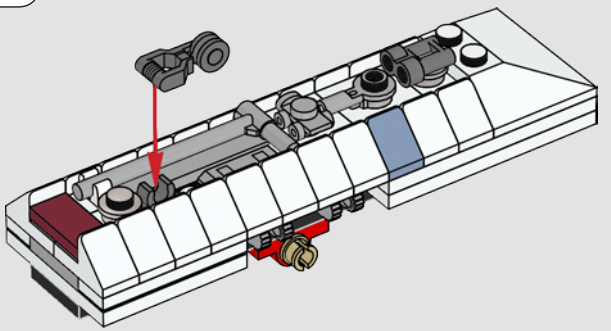

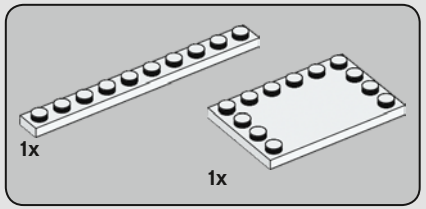

450

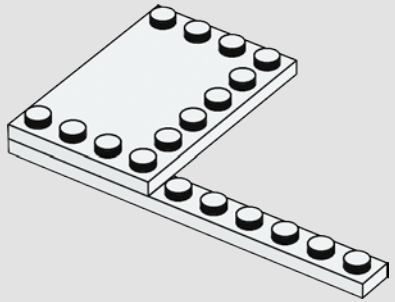

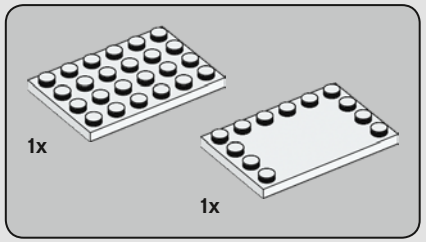

451

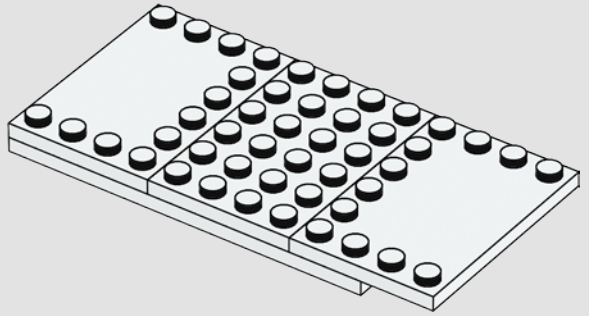

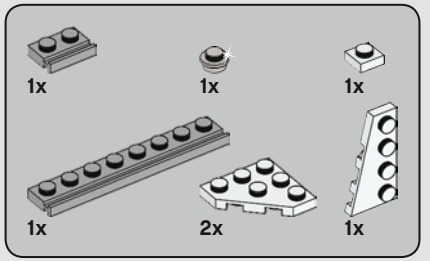

452

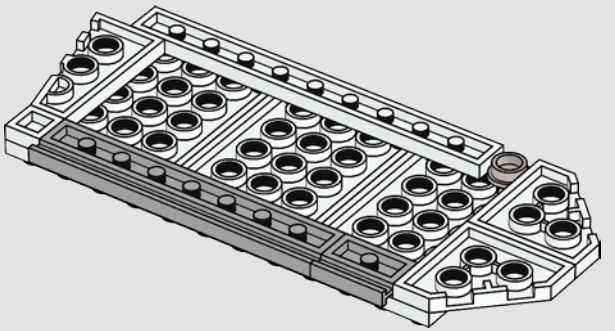

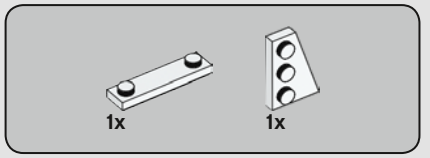

453

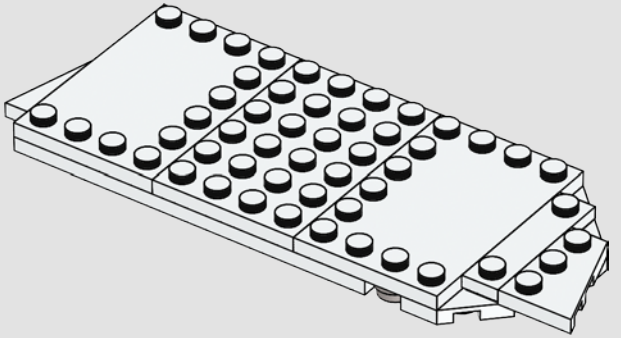

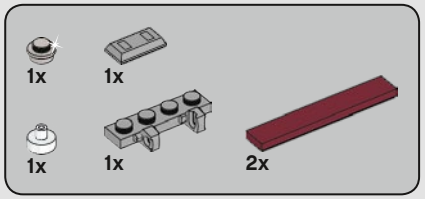

454

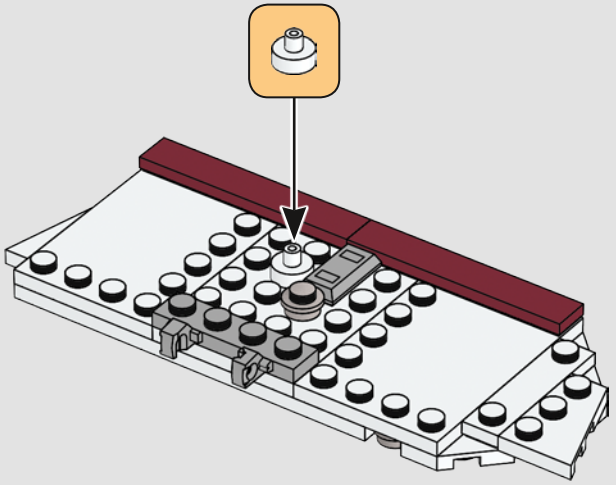

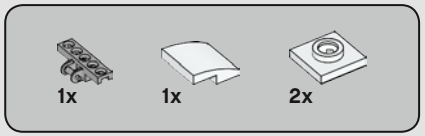

455

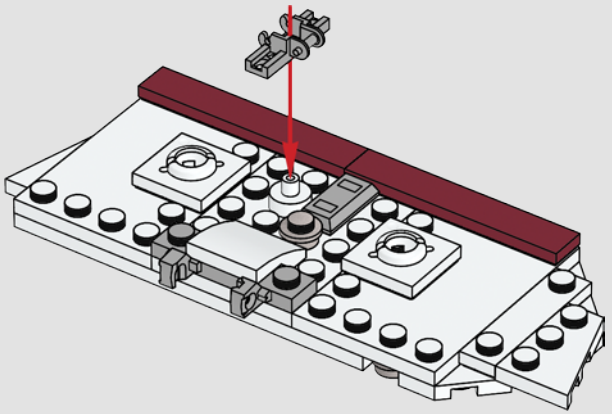

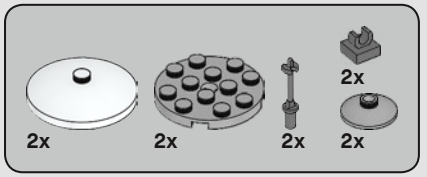

456

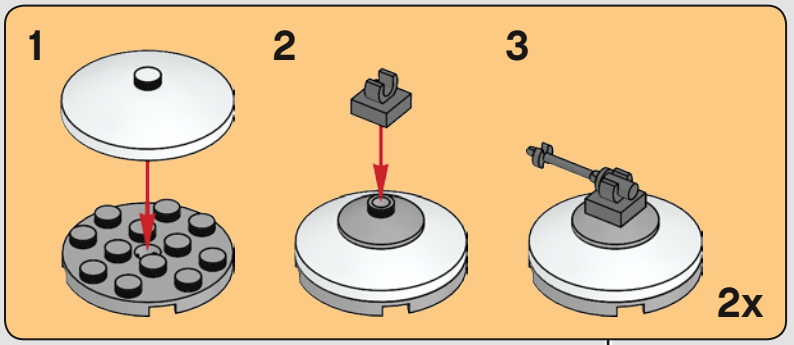

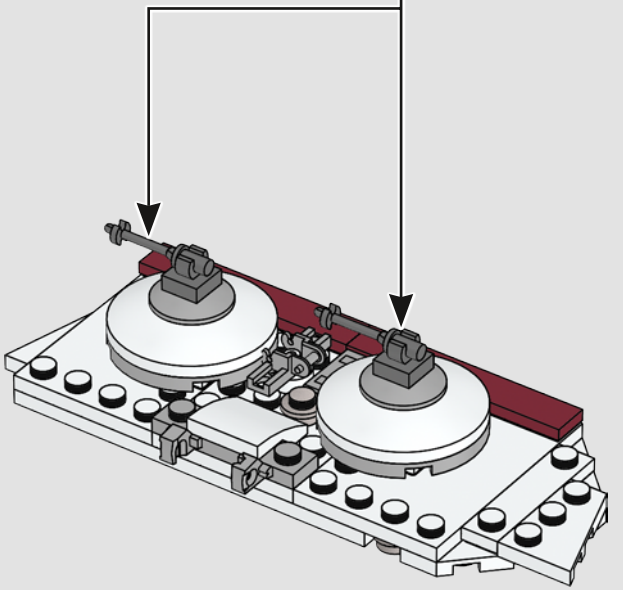

457

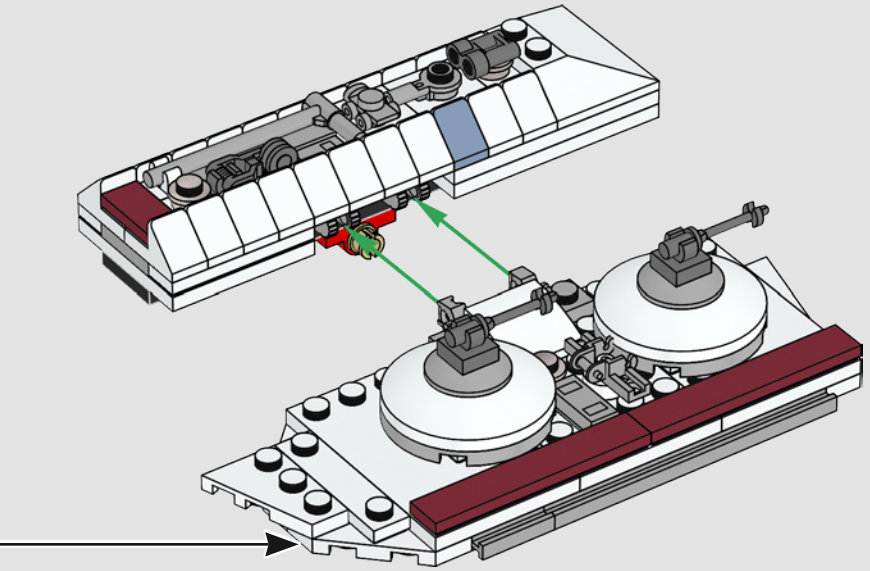

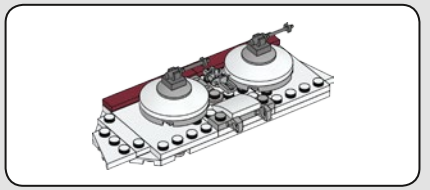

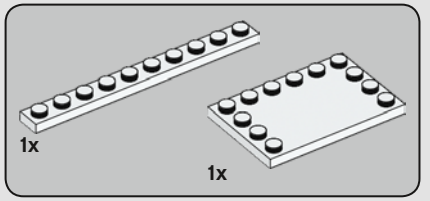

458

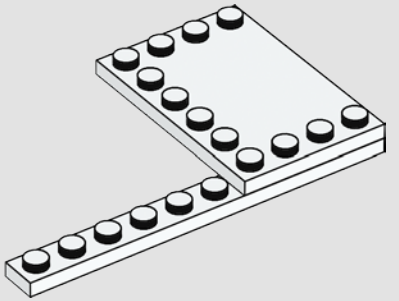

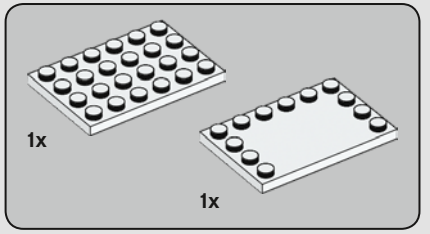

459

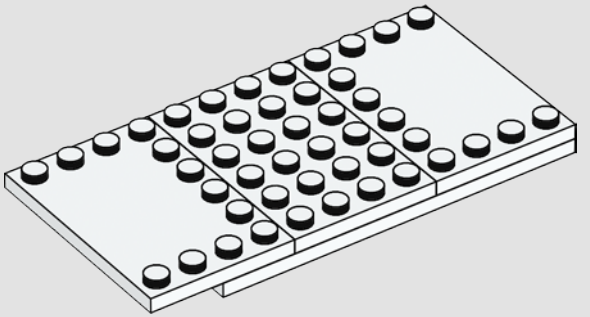

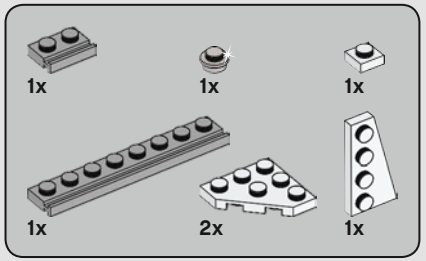

460

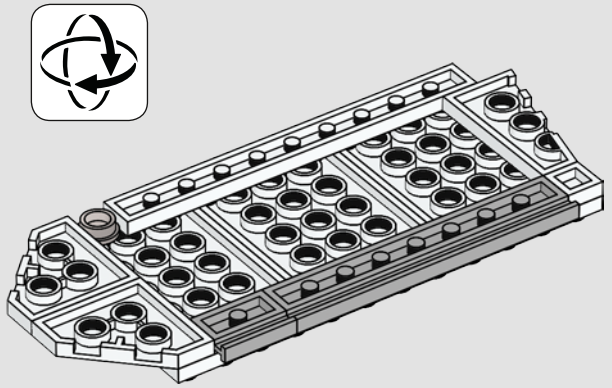

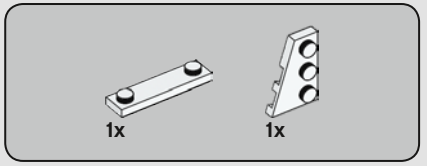

461

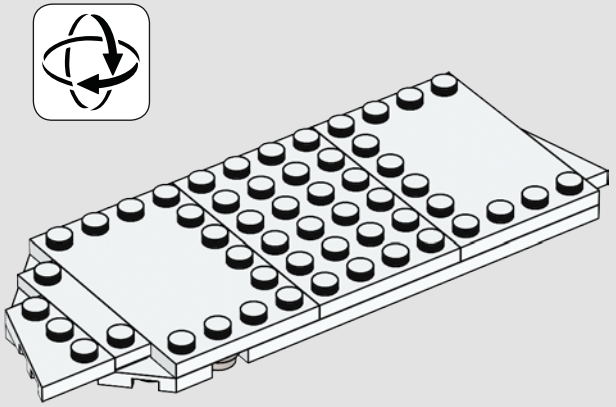

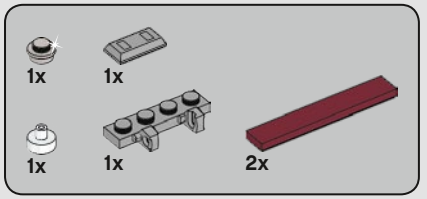

462

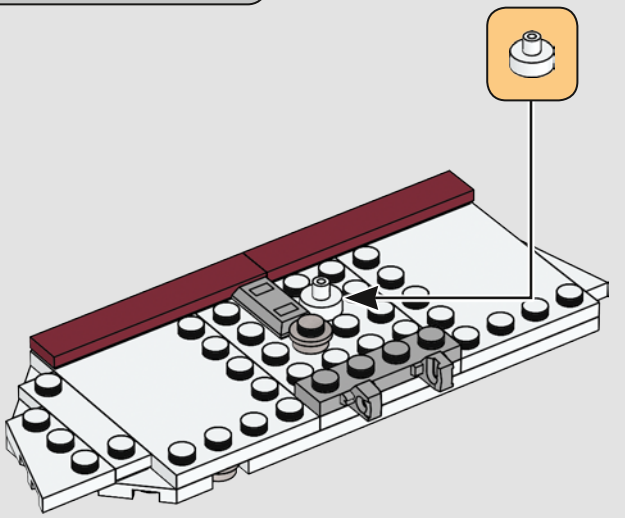

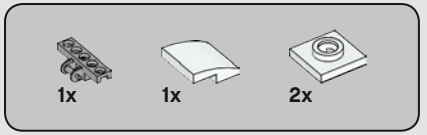

463

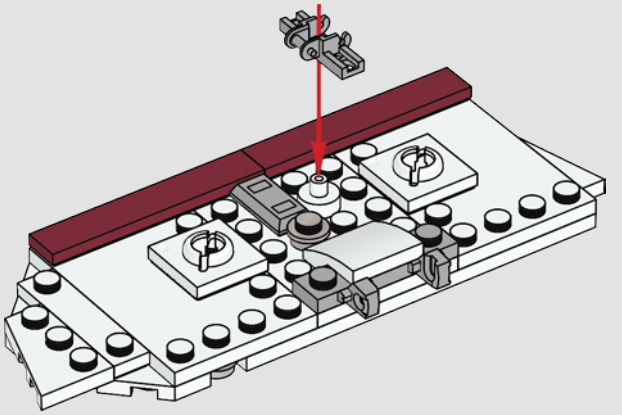

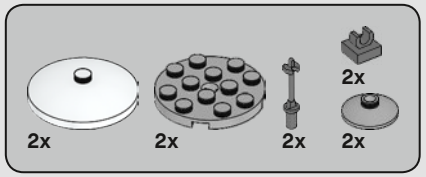

464

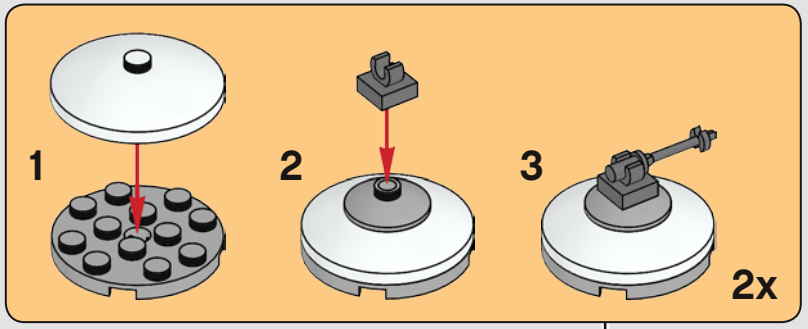

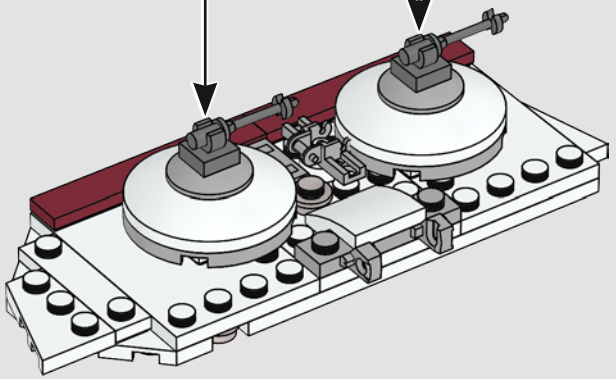

465

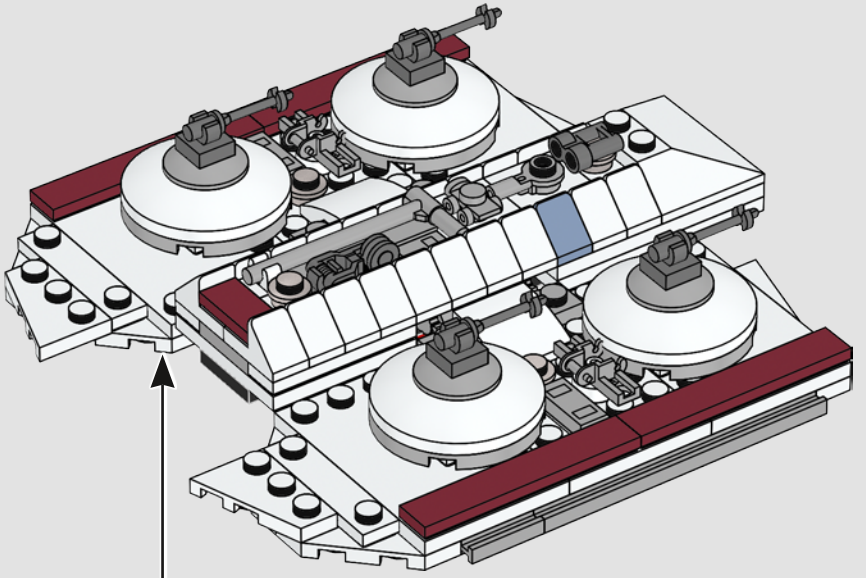

466

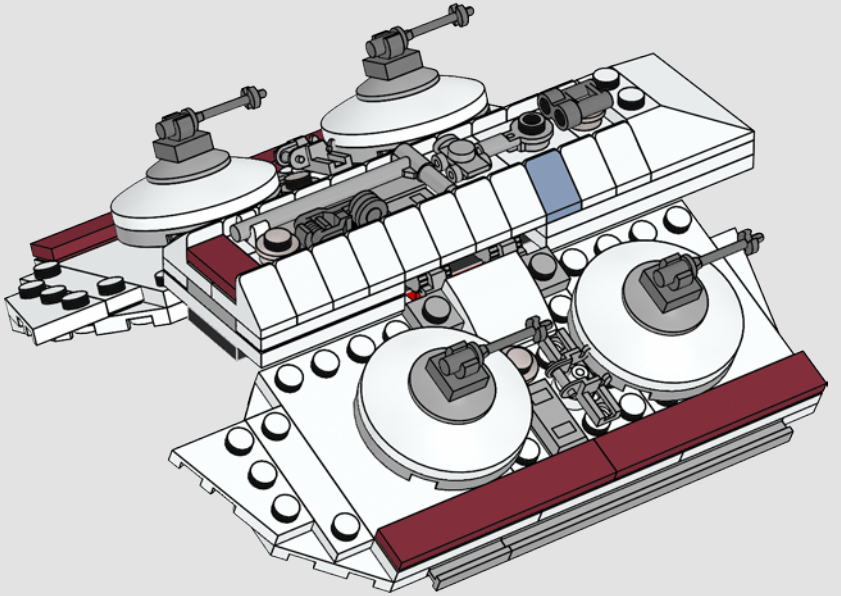

467

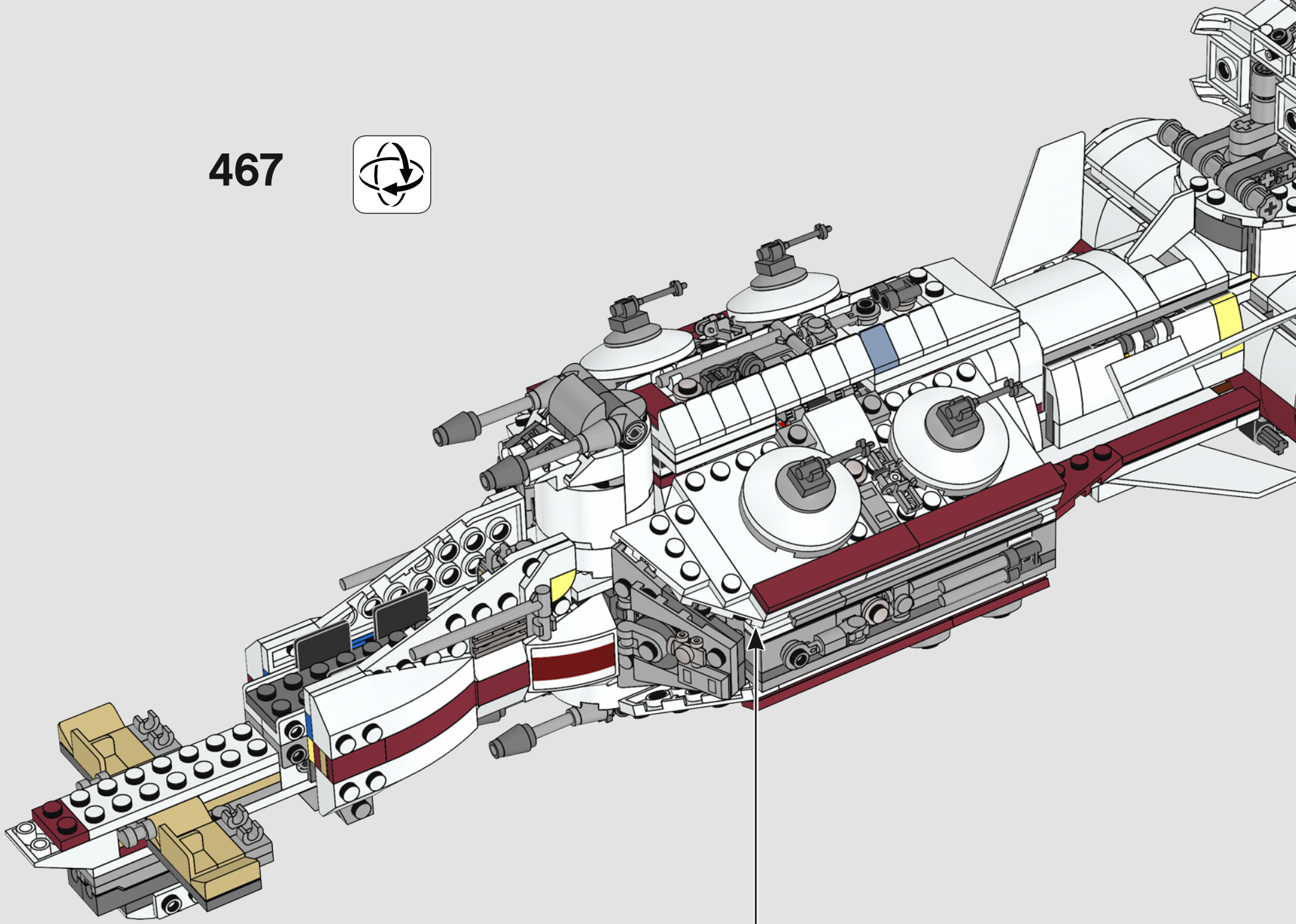

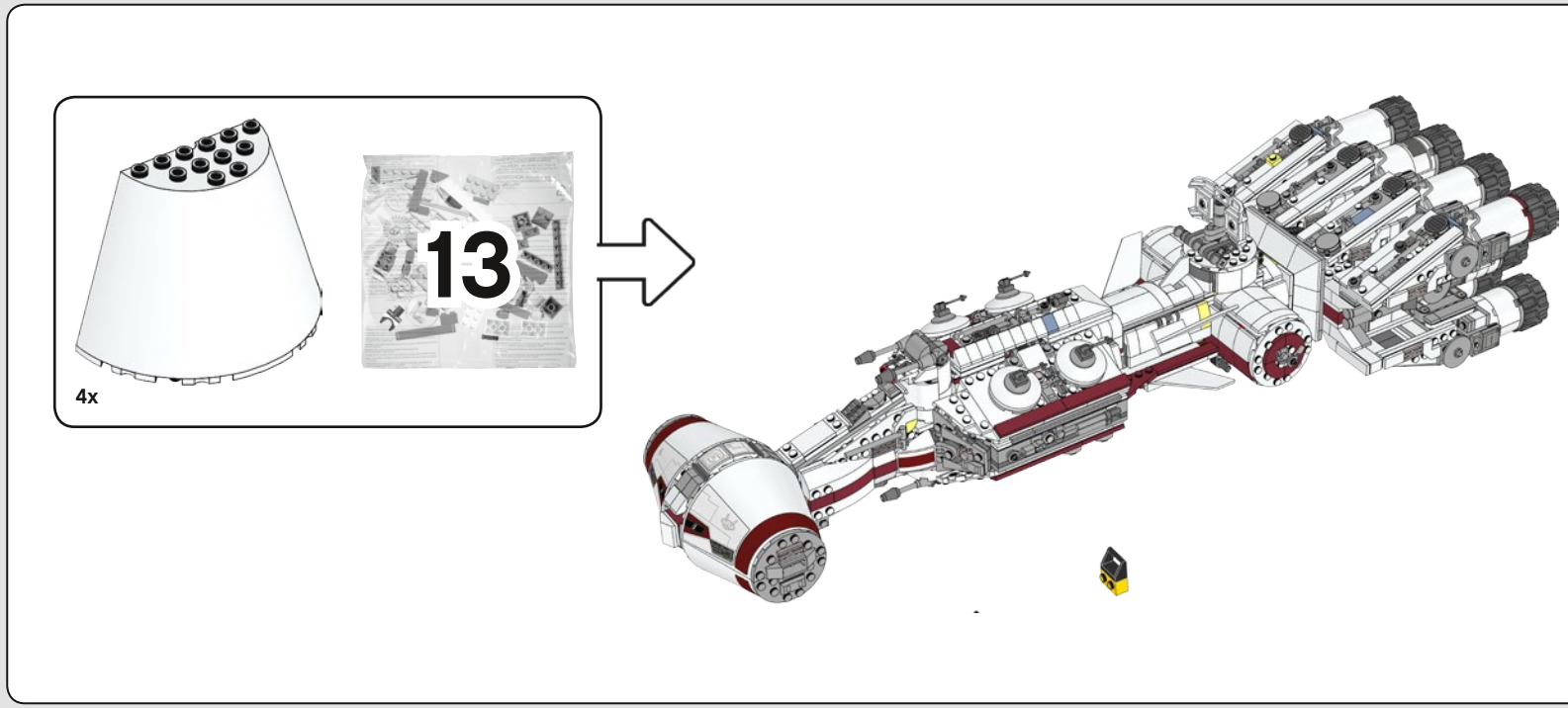
4x
13

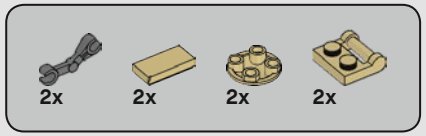

468

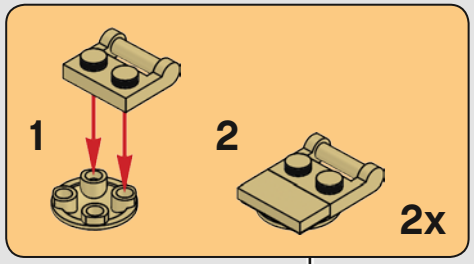

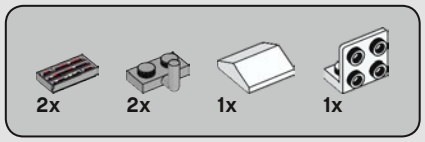

469

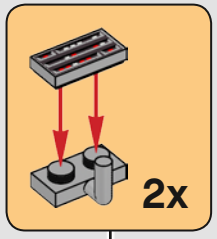

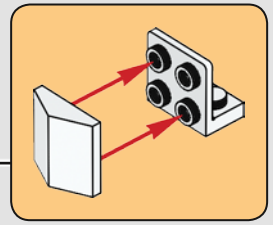

470

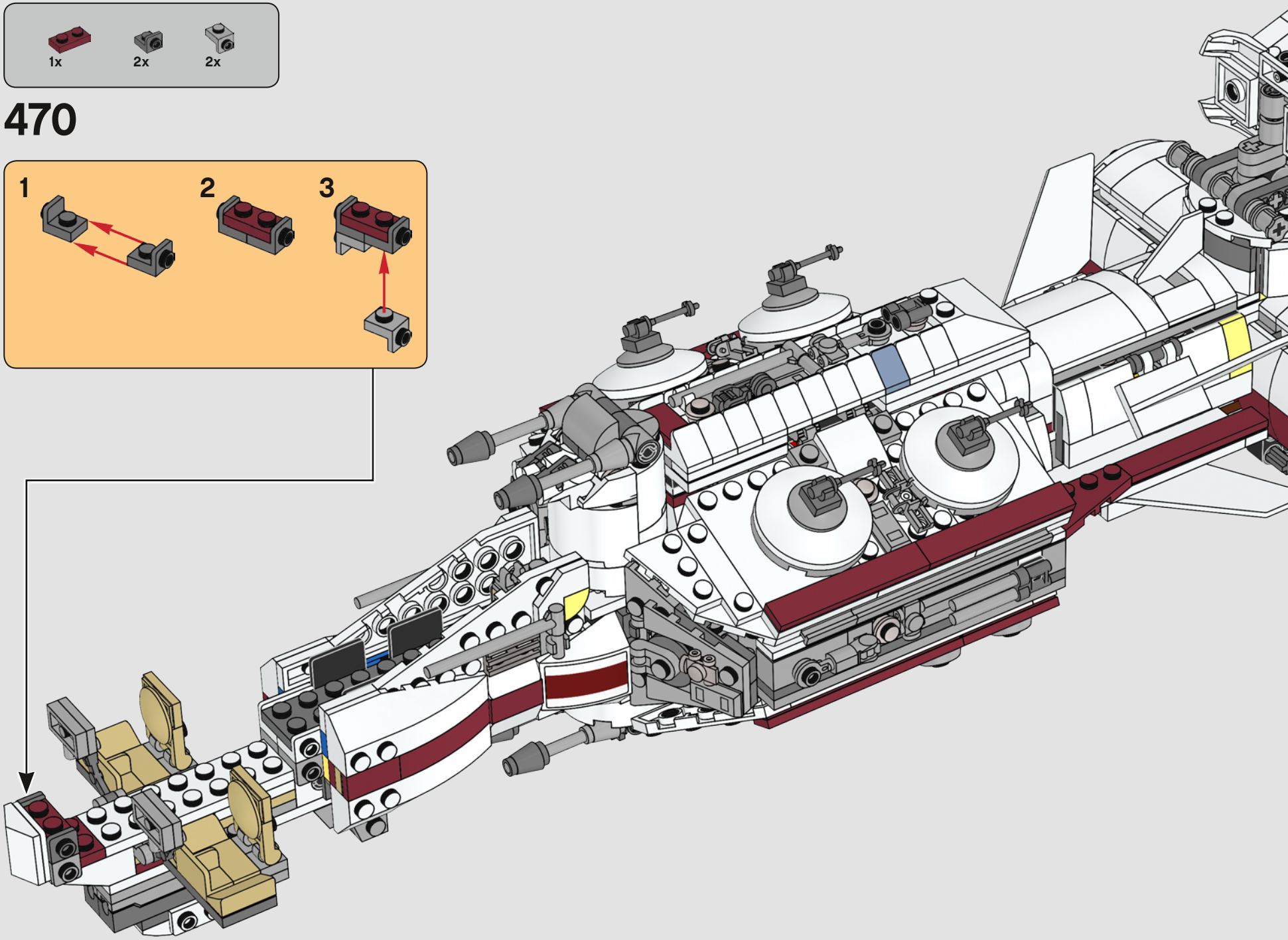

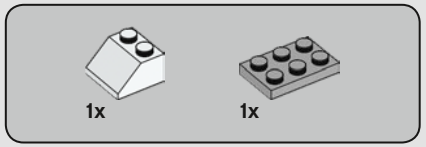

471

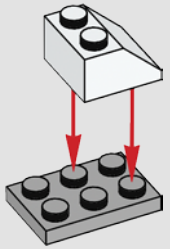

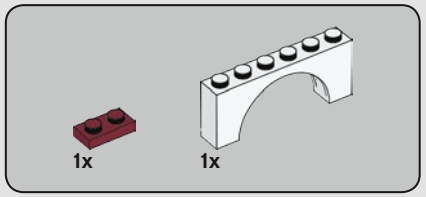

472

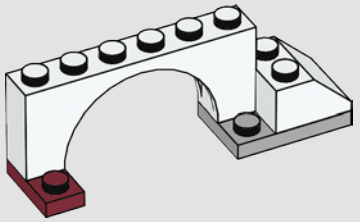

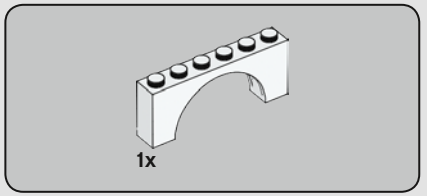

473

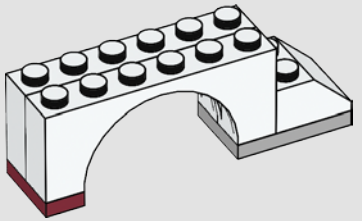

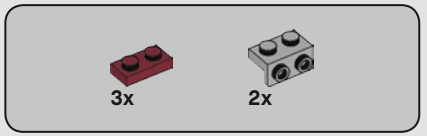

474

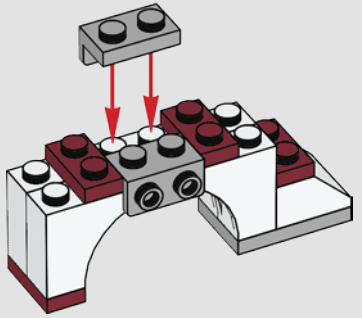

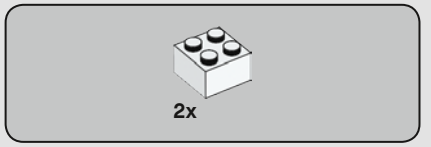

475

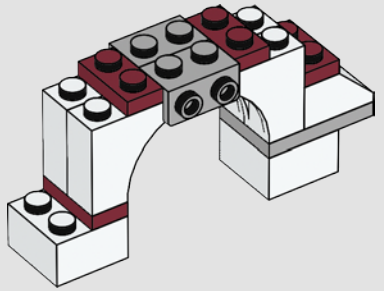

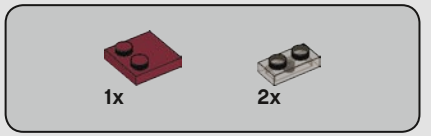

476

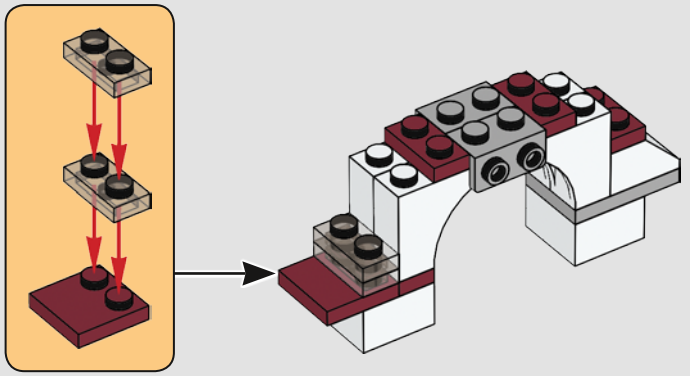

1x 2x

477

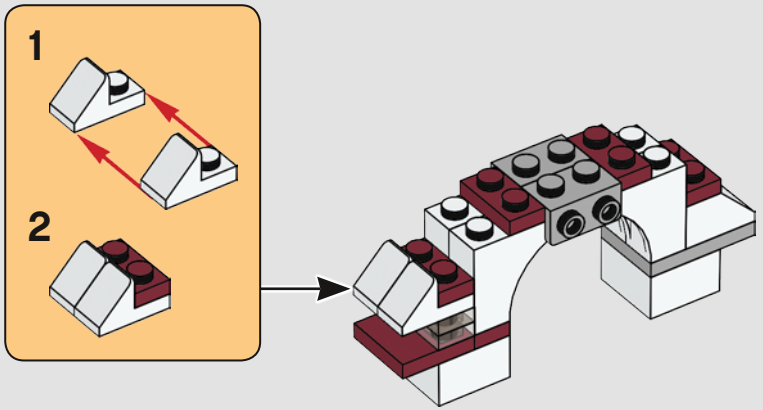

4x

478

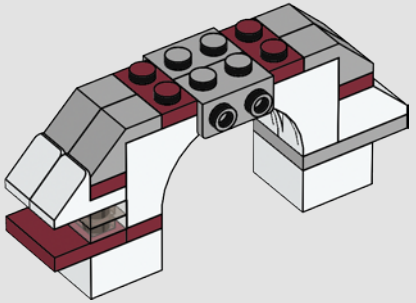

2x 2x

479

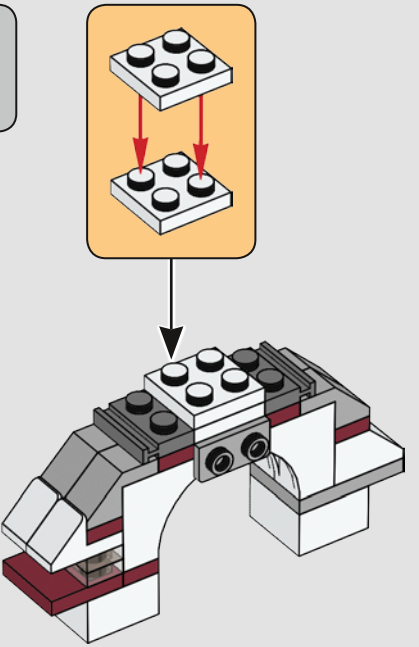

2x

480

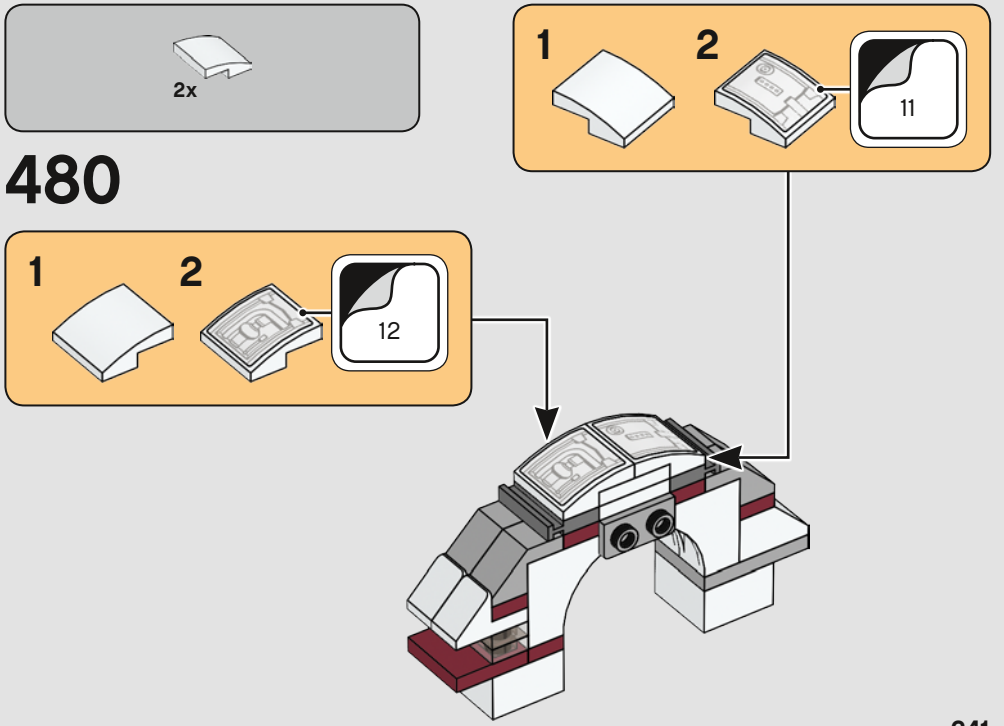

481

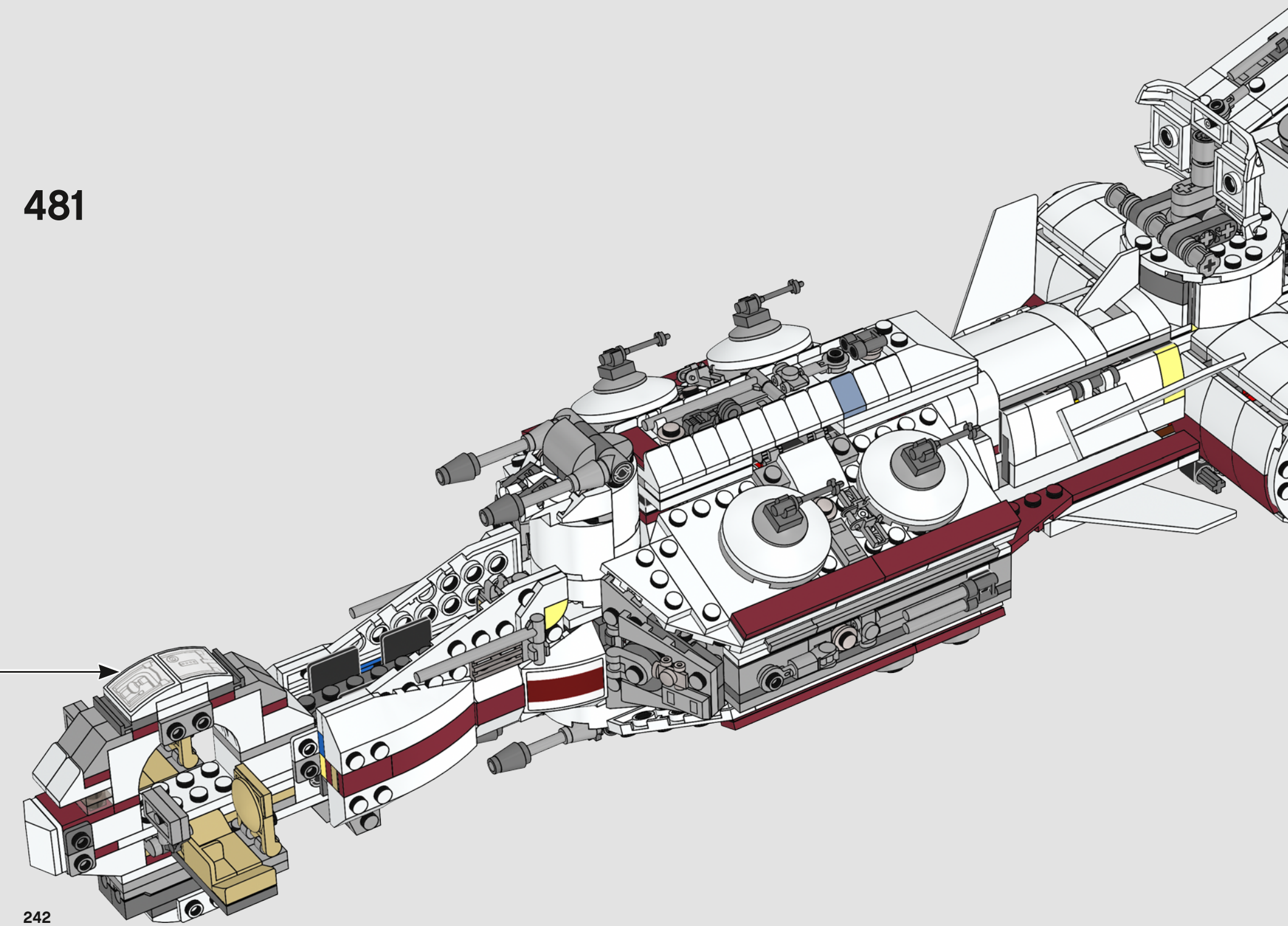

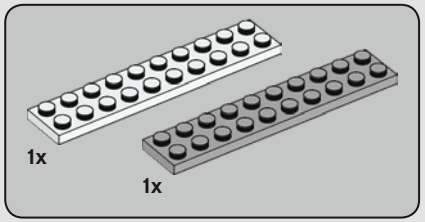

482

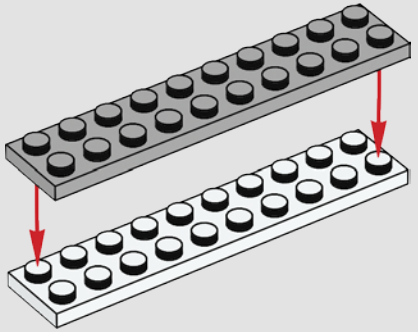

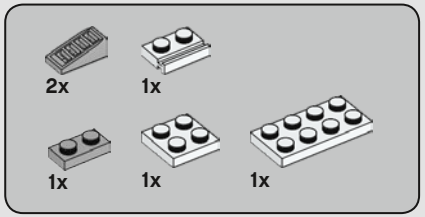

483

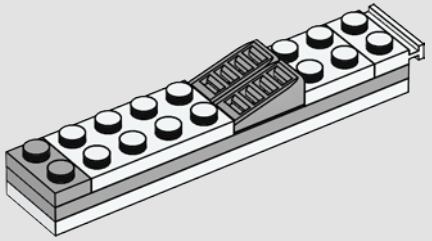

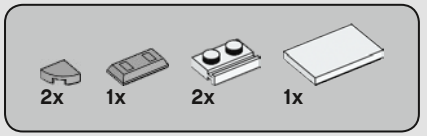

484

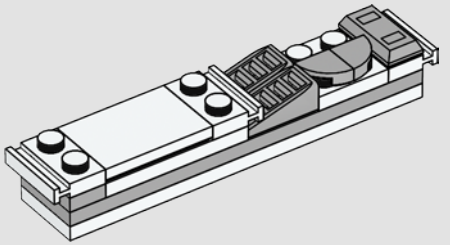

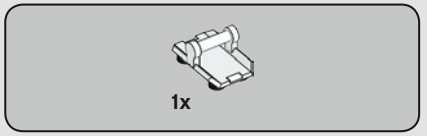

485

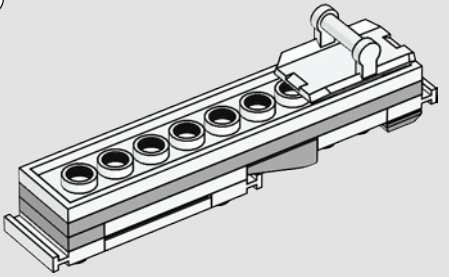

486

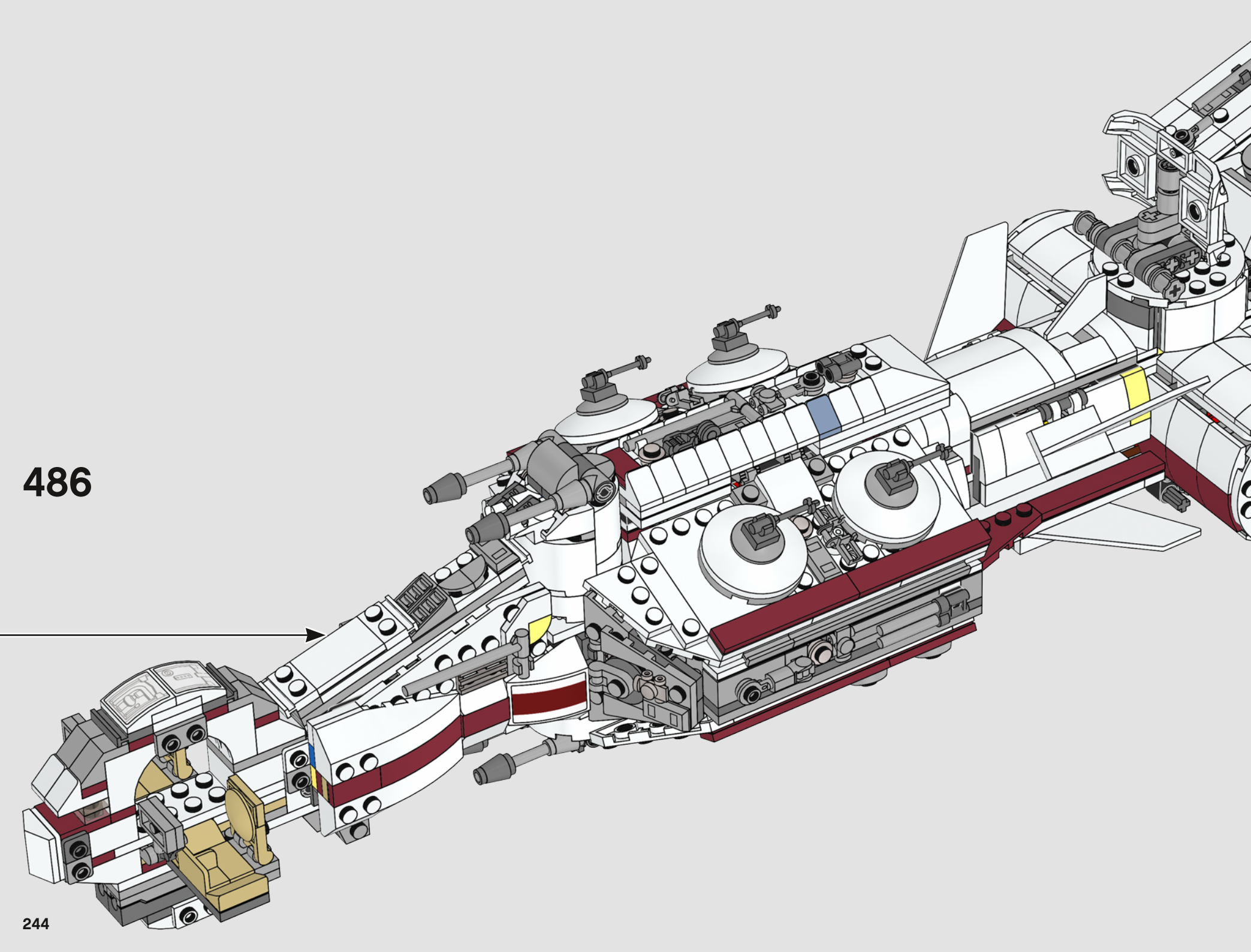

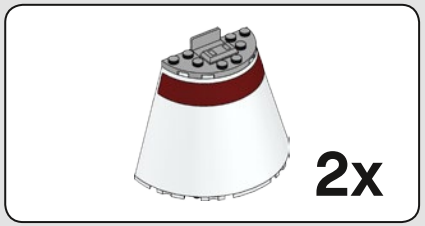

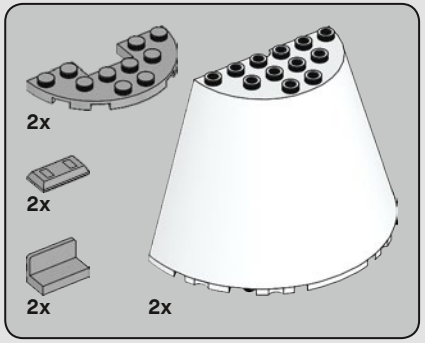

487

1

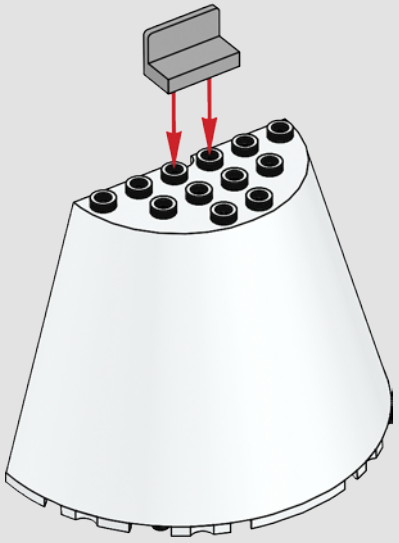

2

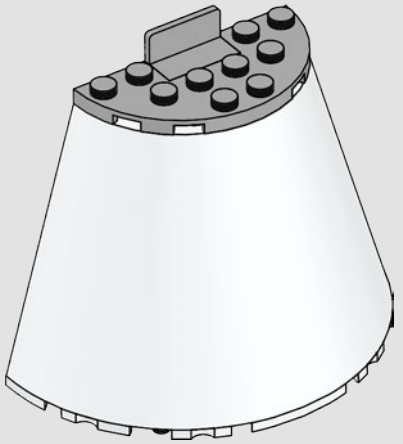

3

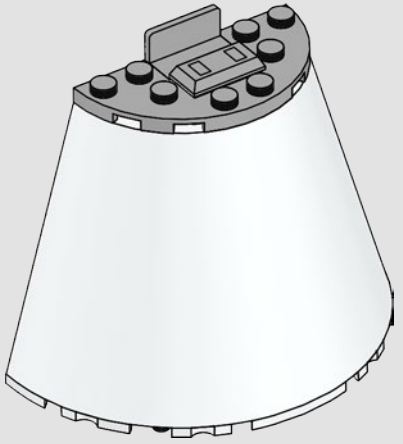

4

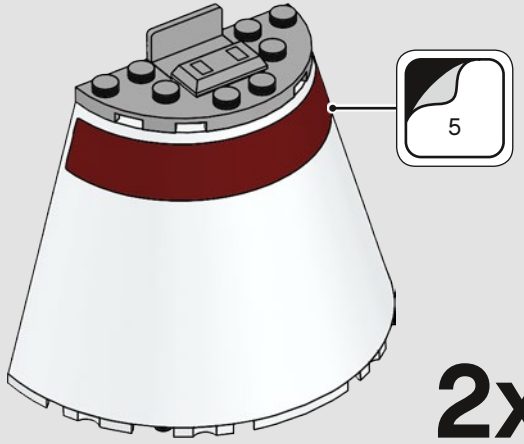

2x

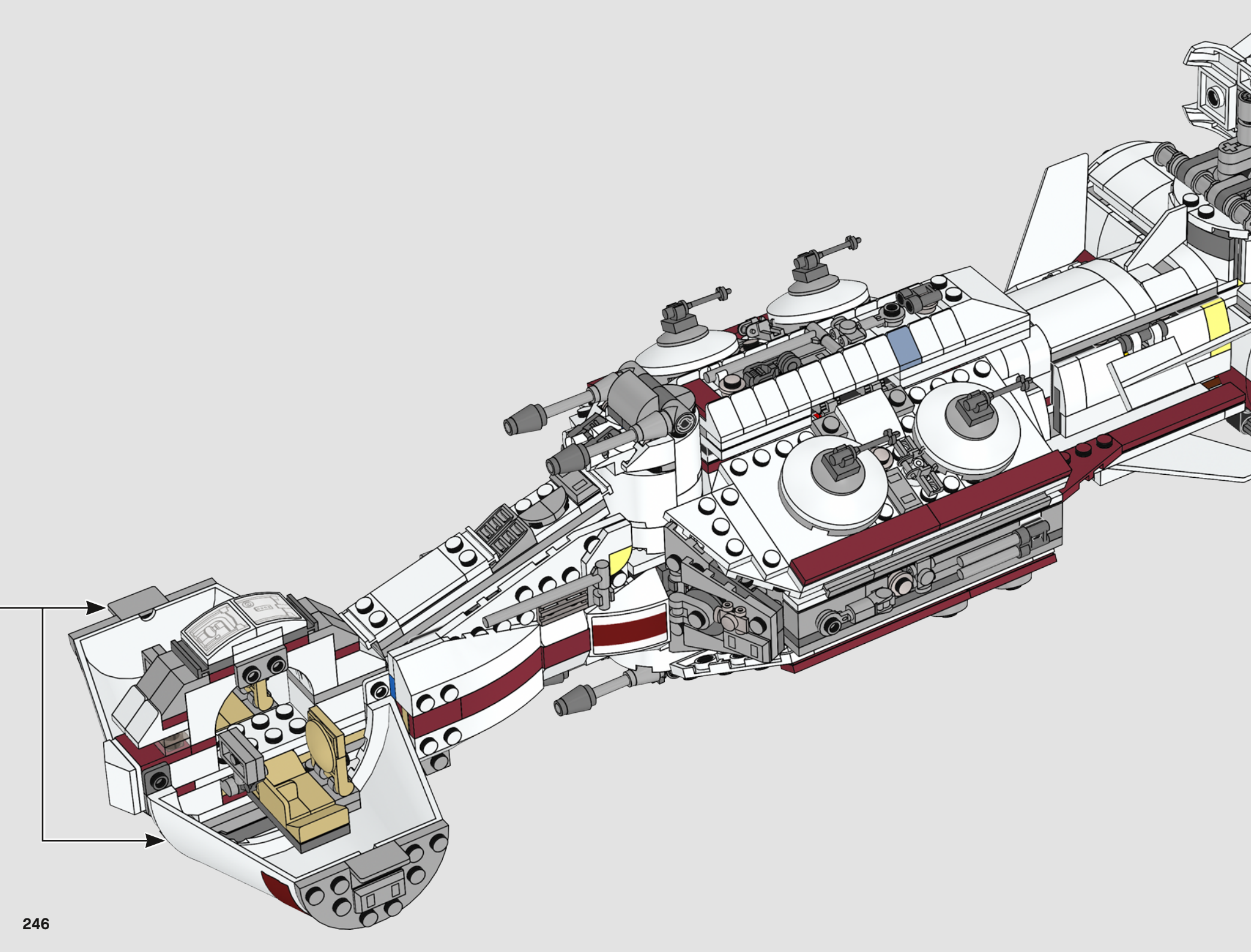

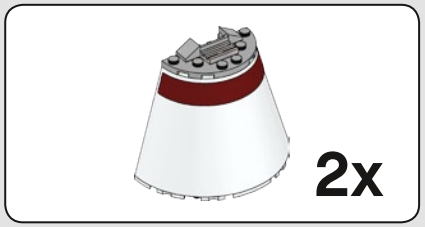

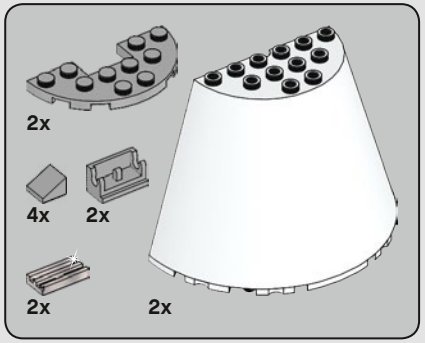

488

1

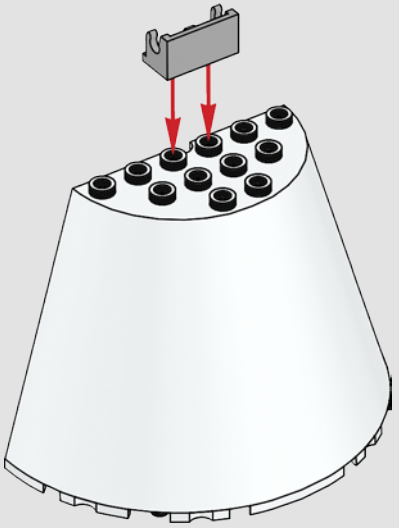

2

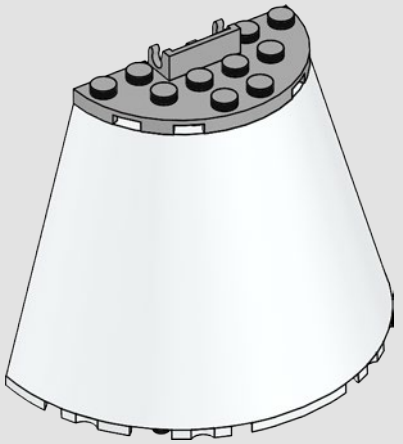

3

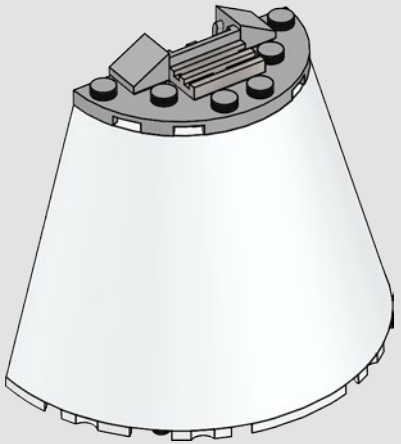

4

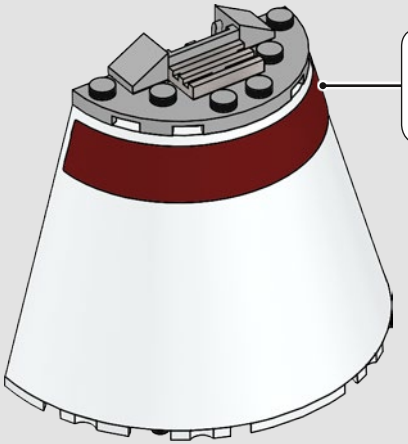

2x

5

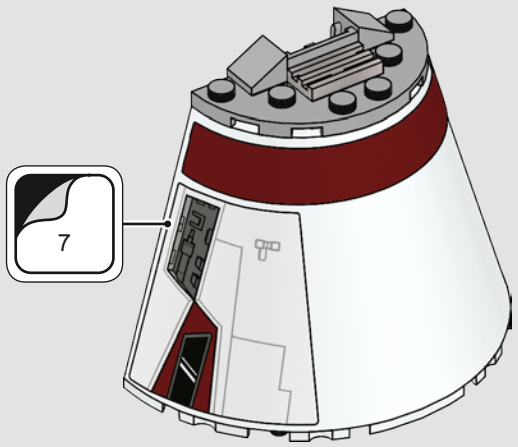

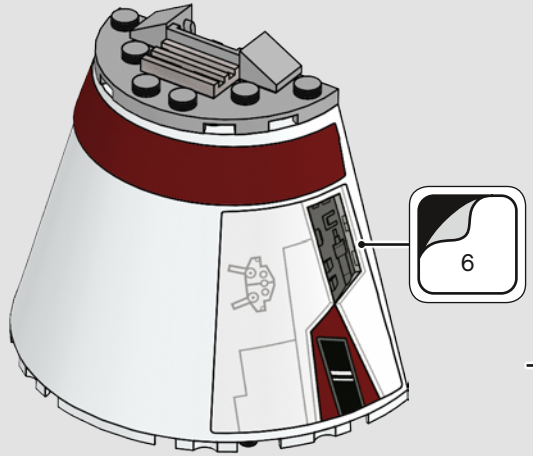

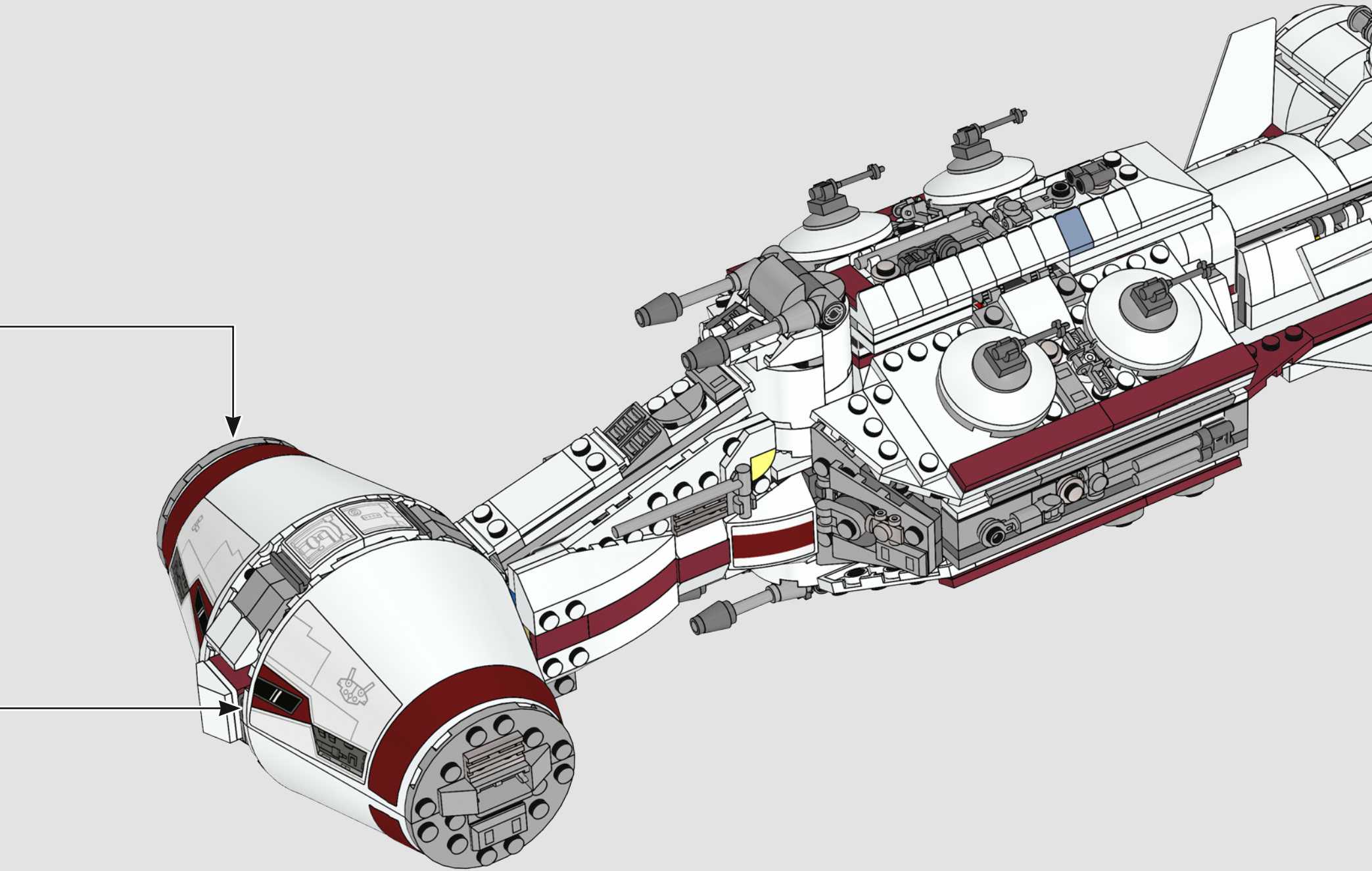

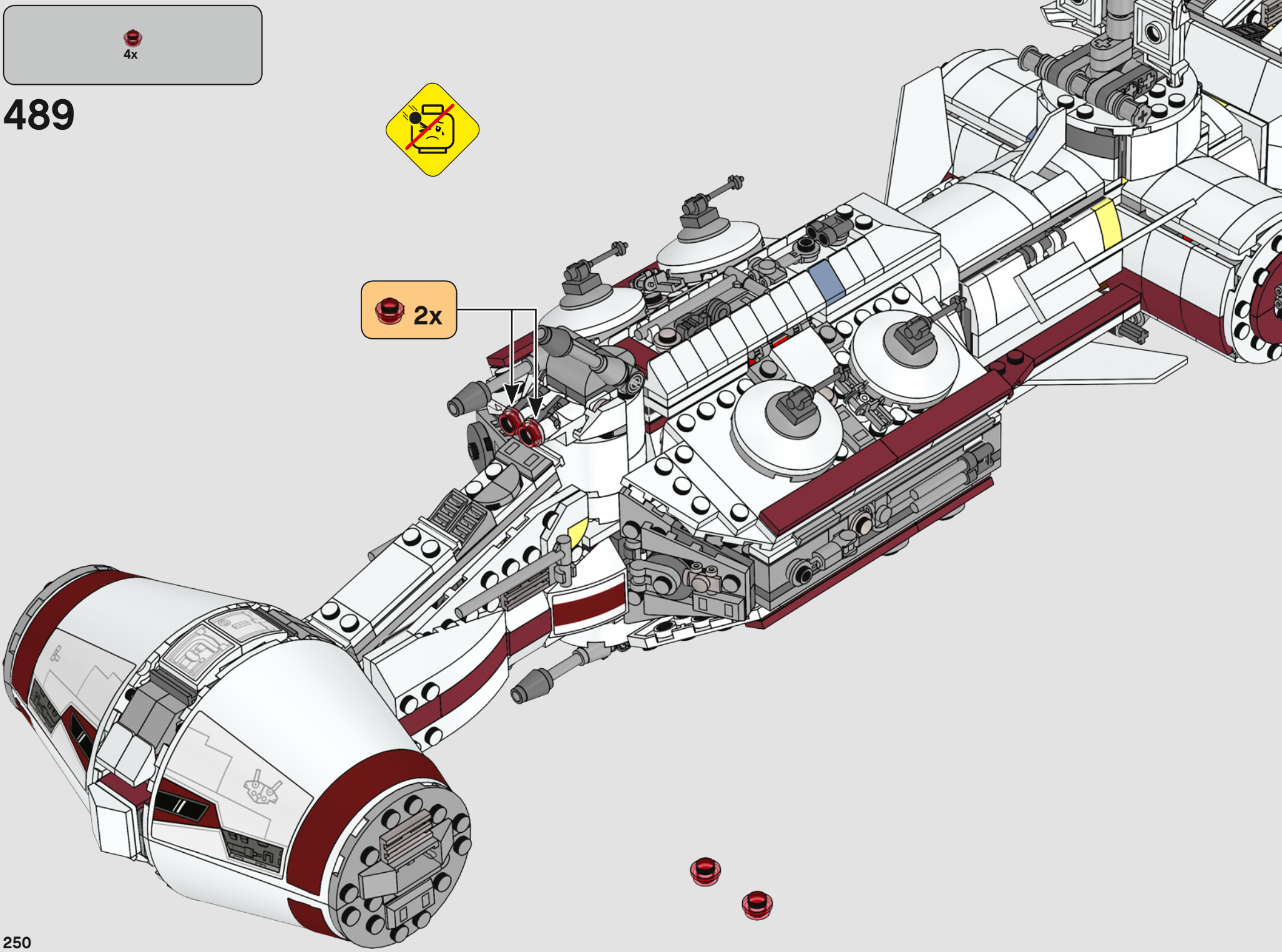
4x
489
2x

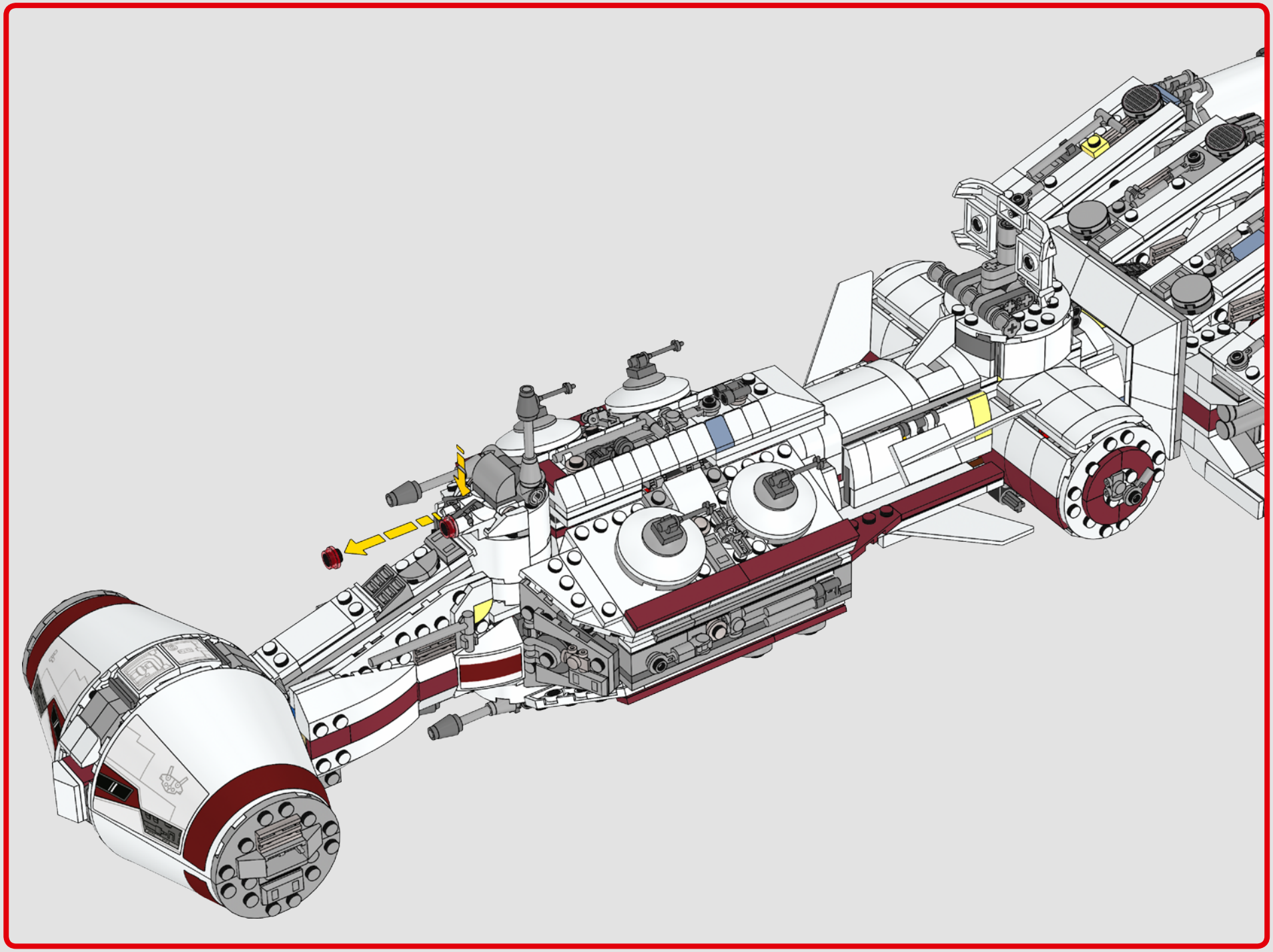

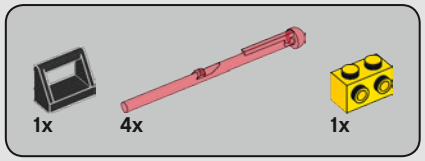

490

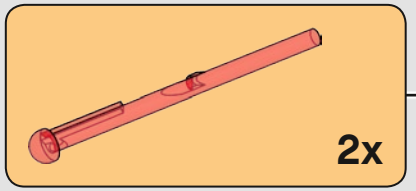

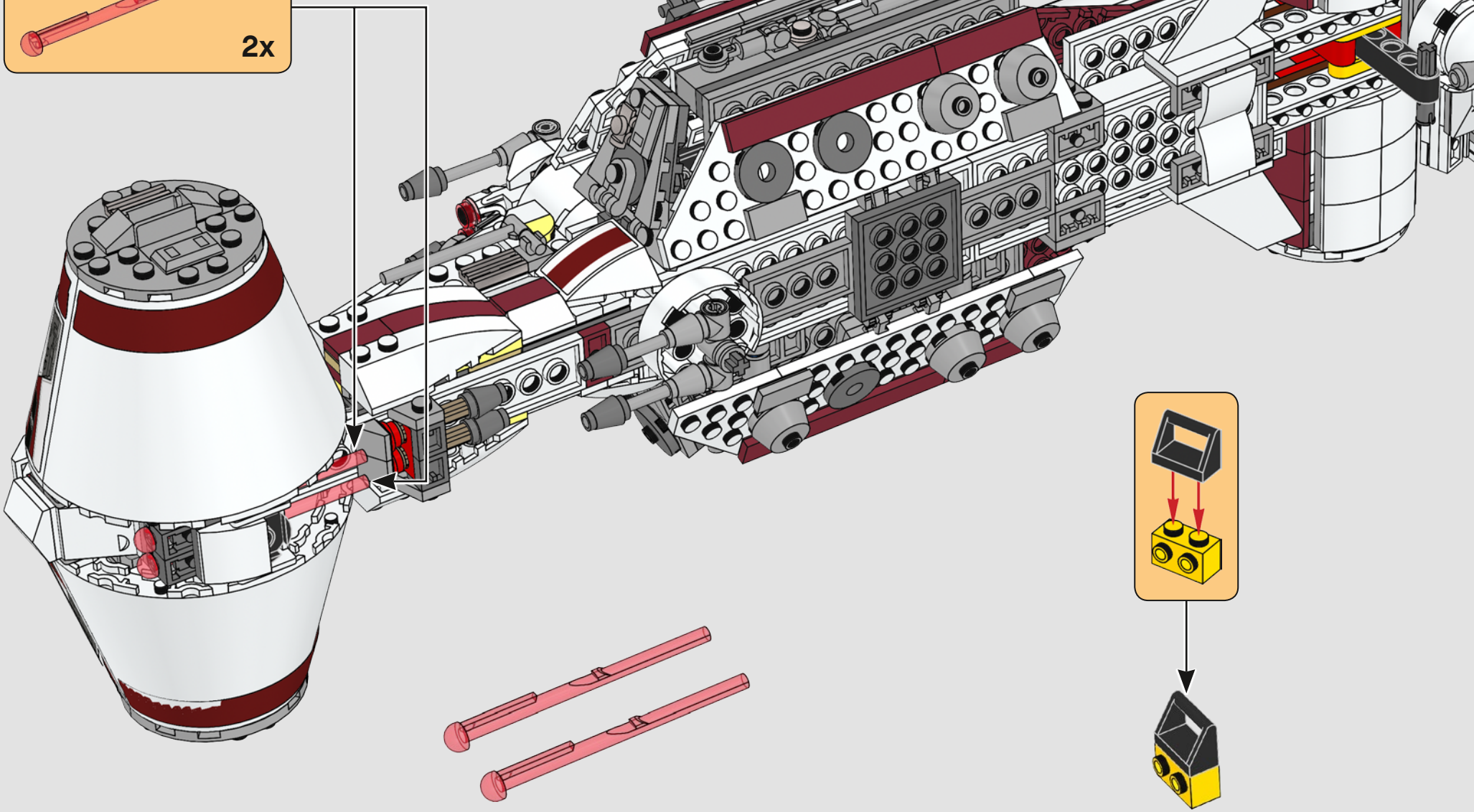

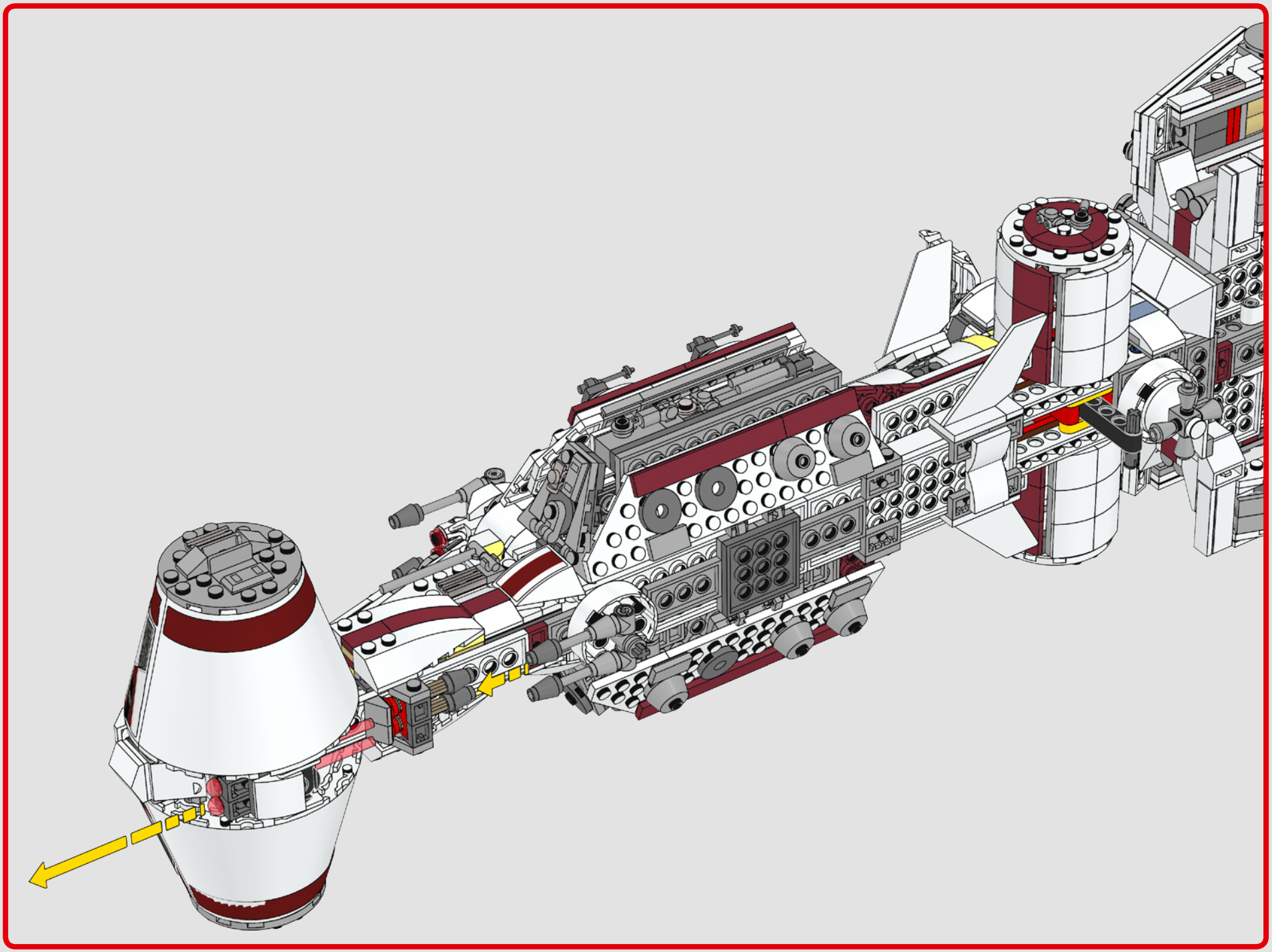

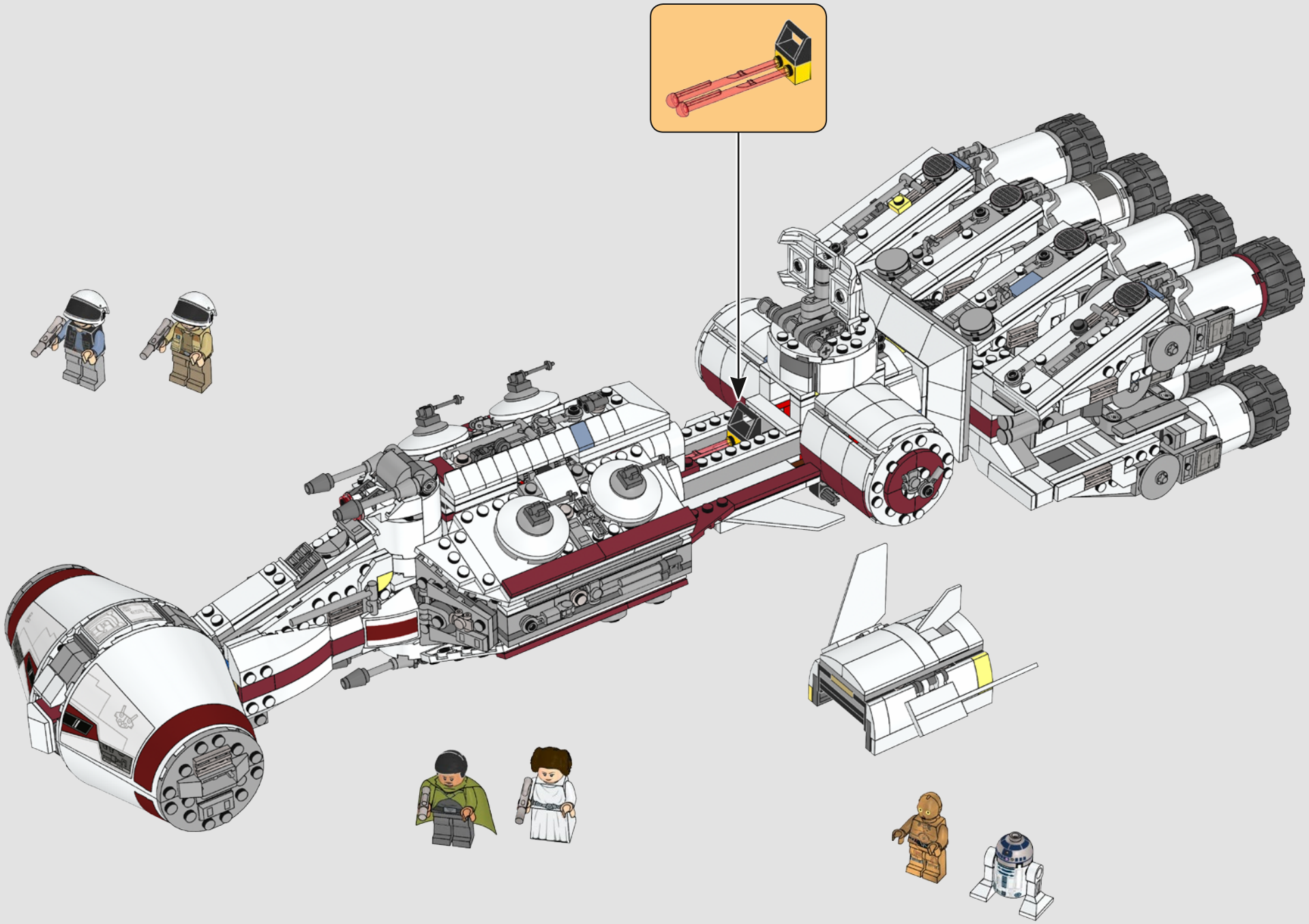

1

2

3

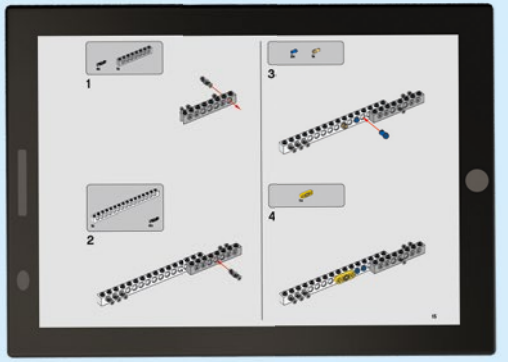

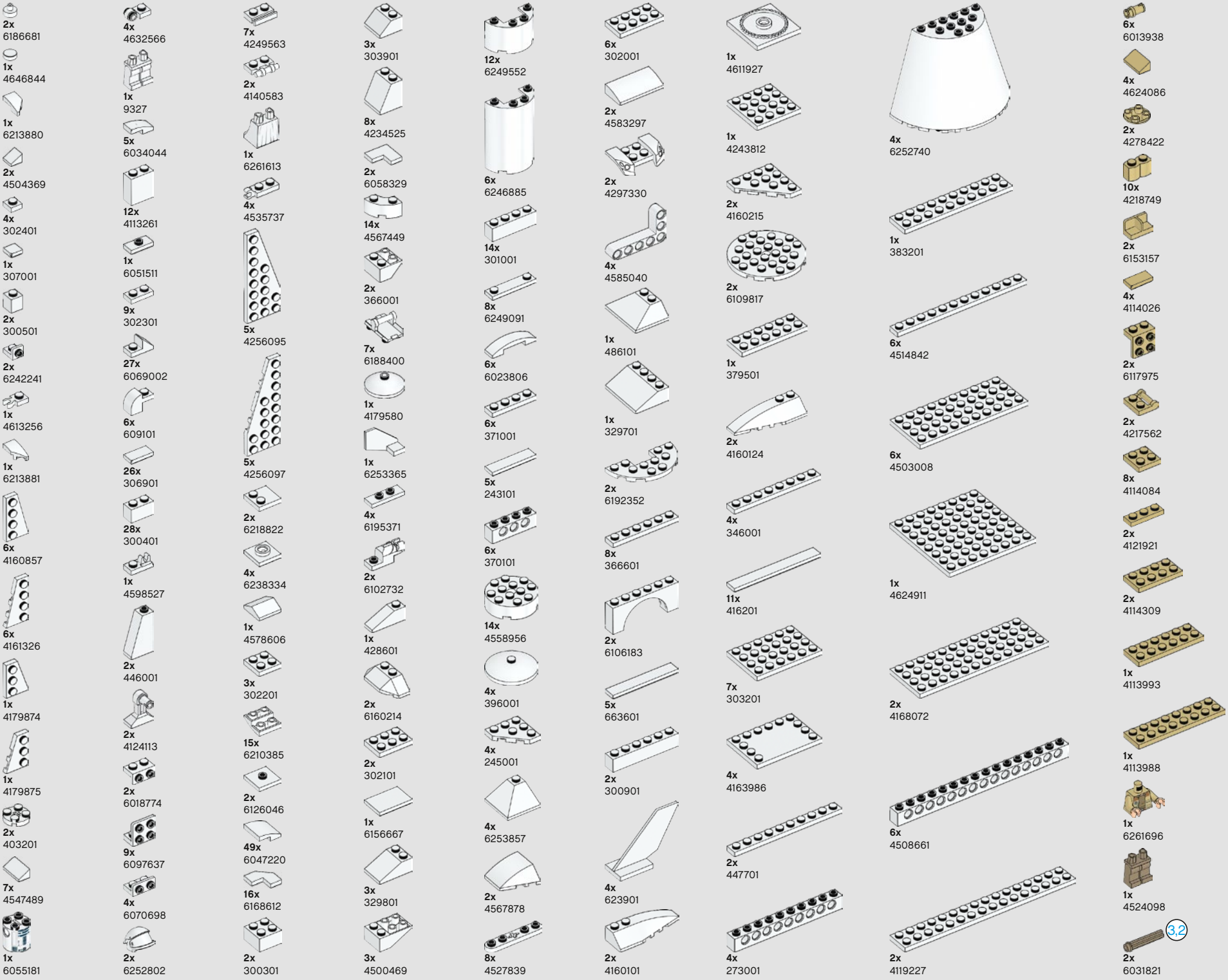
2x 6186681
1x 4646844
1x 6213880
2x 4504369
4x 302401
1x 307001
2x 300501
2x 6242241
1x 4613256
1x 6213881
6x 4160857
6x 4161326
1x 4179874
1x 4179875
2x 403201
7x 4547489
1x 6055181
4x 4632566
1x 9327
5x 6034044
12x 4113261
1x 6051511
9x 302301
27x 6069002
6x 609101
26x 306901
28x 300401
1x 4598527
2x 446001
2x 4124113
2x 6018774
9x 6097637
4x 6070698
2x 6252802
7x 4249563
2x 4140583
1x 6261613
4x 4535737
5x 4256095
5x 4256097
2x 6218822
4x 6238334
1x 4578606
3x 302201
15x 6210385
2x 6126046
49x 6047220
16x 6168612
2x 300301
3x 303901
8x 4234525
2x 6058329
14x 4567449
2x 366001
7x 6188400
1x 4179580
1x 6253365
4x 6195371
2x 6102732
1x 428601
2x 6160214
2x 302101
1x 6156667
3x 329801
3x 4500469
12x 6249552
6x 6246885
14x 301001
8x 6249091
6x 6023806
6x 371001
5x 243101
6x 370101
14x 4558956
4x 396001
4x 245001
4x 6253857
2x 4567878
8x 4527839
6x 302001
2x 4583297
2x 4297330
4x 4585040
1x 486101
1x 329701
2x 6192352
8x 366601
2x 6106183
5x 663601
2x 300901
4x 623901
2x 4160101
1x 4611927
1x 4243812
2x 4160215
2x 6109817
1x 379501
2x 4160124
4x 346001
11x 416201
7x 303201
4x 4163986
2x 447701
4x 273001
4x 6252740
1x 383201
6x 4514842
6x 4503008
1x 4624911
2x 4168072
6x 4508661
2x 4119227
6x 6013938
4x 4624086
2x 4278422
10x 4218749
2x 6153157
4x 4114026
2x 6117975
2x 4217562
8x 4114084
2x 4121921
2x 4114309
1x 4113993
1x 4113988
1x 6261696
1x 4524098
3,2
2x 6031821

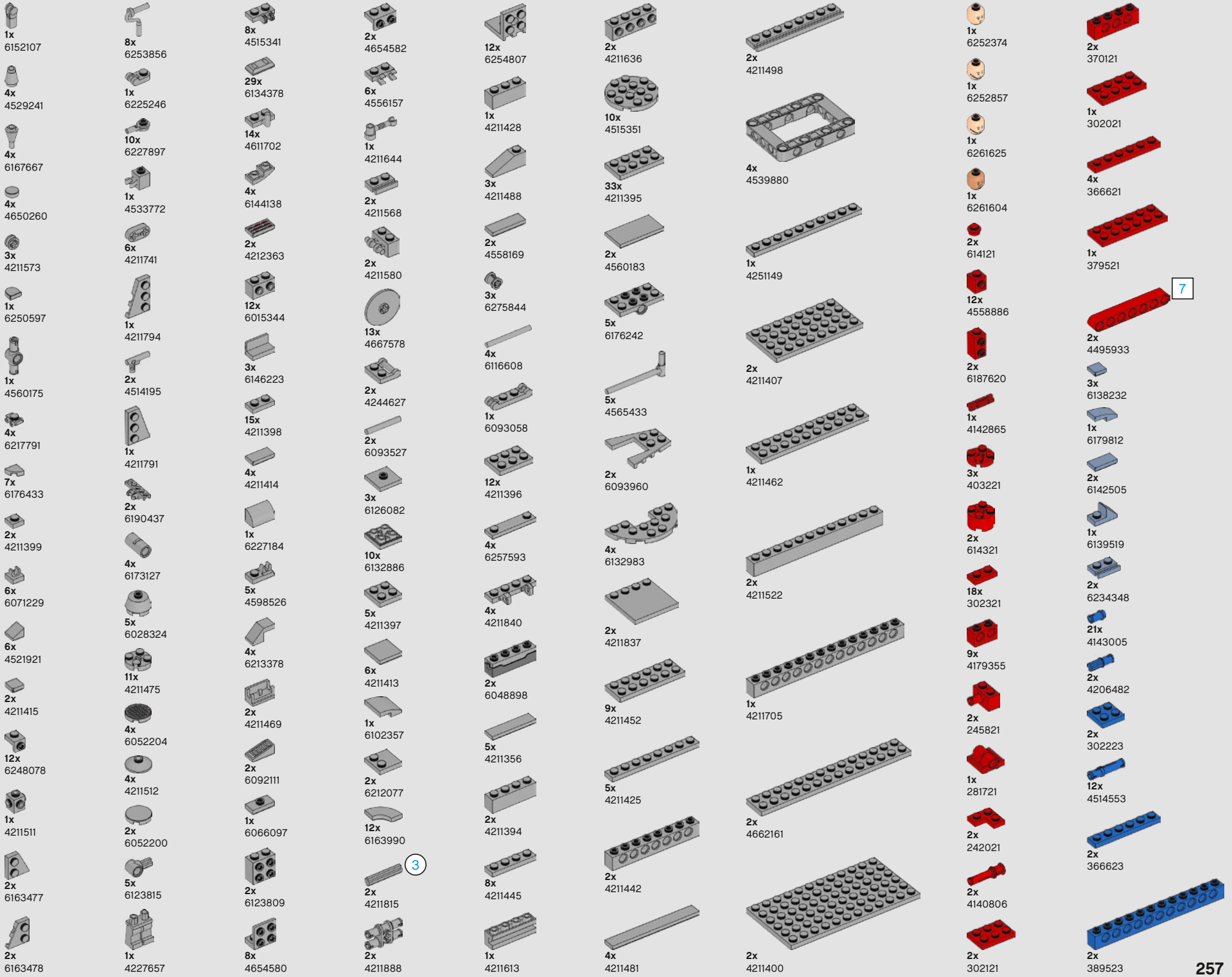
1x 6152107
4x 4529241
4x 6167667
4x 4650260
3x 4211573
1x 6250597
1x 4560175
4x 6217791
7x 6176433
2x 4211399
6x 6071229
6x 4521921
2x 4211415
12x 6248078
1x 4211511
2x 6163477
2x 6163478
8x 6253856
1x 6225246
10x 6227897
1x 4533772
6x 4211741
1x 4211794
2x 4514195
1x 4211791
2x 6190437
4x 6173127
5x 6028324
11x 4211475
4x 6052204
4x 4211512
2x 6052200
5x 6123815
1x 4227657
8x 4515341
29x 6134378
14x 4611702
4x 6144138
2x 4212363
12x 6015344
3x 6146223
15x 4211398
4x 4211414
1x 6227184
5x 4598526
4x 6213378
2x 4211469
2x 6092111
1x 6066097
2x 6123809
8x 4654580
2x 4654582
6x 4556157
1x 4211644
2x 4211568
2x 4211580
13x 4667578
2x 4244627
2x 6093527
3x 6126082
10x 6132886
5x 4211397
6x 4211413
1x 6102357
2x 6212077
12x 6163990
3
2x 4211815
2x 4211888
12x 6254807
1x 4211428
3x 4211488
2x 4558169
3x 6275844
4x 6116608
1x 6093058
12x 4211396
4x 6257593
4x 4211840
2x 6048898
5x 4211356
2x 4211394
8x 4211445
1x 4211613
2x 4211636
10x 4515351
33x 4211395
2x 4560183
5x 6176242
5x 4565433
2x 6093960
4x 6132983
2x 4211837
9x 4211452
5x 4211425
2x 4211442
4x 4211481
2x 4211498
4x 4539880
1x 4251149
2x 4211407
1x 4211462
2x 4211522
1x 4211705
2x 4662161
2x 4211400
1x 6252374
1x 6252857
1x 6261625
1x 6261604
2x 614121
12x 4558886
2x 6187620
1x 4142865
3x 403221
2x 614321
18x 302321
9x 4179355
2x 245821
1x 281721
2x 242021
2x 4140806
2x 302121
2x 370121
1x 302021
4x 366621
1x 379521
7
2x 4495933
3x 6138232
1x 6179812
2x 6142505
1x 6139519
2x 6234348
21x 4143005
2x 4206482
2x 302223
12x 4514553
2x 366623
2x 389523

2x
6042953

2x
4539060

6x
4539061

1x
4539068

1x
4539069

2x
4631233

6x
4650865

2x
4539083

2x
4223683

3x
6214309

6x
6107758

1x
6075208

5x
4539090

30x
4539097

2x
4539104

8x
6172632

5x
4210869

5x
4210872

4x
6250678

6x
4529240

1x
4211081

1x
4211124

2x
6051334

13x
6071226

5x
4211044

12x
6228923

12x
6225494

3x
4211051

8x
4587212

3x
6055313

2x
6115080

1x
4222693

1x
6176400

2x
6019987

8x
4210762

5x
4211063

2x
4540386

2x
4210900

1x
6029948

4x
6117972

2x
6000606

2x
4543086

5x
4278274

6x
4211042

2x
4567887

2x
6146321

2x
4223767

6x
4211094

2x
4210635

3x
6015356

8x
6118832

4
4x
6083620

2x
4211001

5,5
8x
4508553

5x
4243831

4x
4210997

2x
4210678

2x
6133611

20x
4633691

1x
6215447

1x
6124928

1x
6150296

22x
4619636

3x
6122722

5x
6038201

11x
6122170

8x
306226

1x
302426

1x
6234695

1x
4653226

2x
6252803

6x
4278359

1x
403226

64x
4121715

1x
4569733

1x
243226

4x
6092585

6x
302326

4x
6117973

6x
6000650

2x
4565323

2x
407926

4
3x
370526

6x
371026

7x
379526

2x
6170702

2x
4188143

1x
244526

13
1x
4522933

1x
6001494

2x
302026

1x
300126

6
1x
370626

1x
6058118

6x
4183133

2x
4109674

1x
6259701

1x
6261606

1x
6159620

1x
4653753

1x
6078373

1x
6138412

1x
6256085

1x
6158396

2x
306224

5x
403224

23x
614324

1x
6119197

4x
4107823

1x
6224666

1x
6228969

1x
6058014

1x
6147726

2x
6061201

6x
6248756

2x
6248761

6x
6208450

4x
6054526

1x
6240515

11x
6171727

2x
6240219

Customer Service
Kundenservice
Service Consommateurs
Servicio Al Consumidor
LEGO.com/service or dial

00800 5346 5555 :
1-800-422-5346 :

LEGO.com/productfeedback

GEWINNE

Erzähle uns auf www.LEGO.com/productfeedback

etwas über die Erfahrungen, die du mit diesem LEGO® Set gemacht hast, und sichere dir die Chance auf einen coolen LEGO Preis!

Es gelten die Teilnahmebedingungen

GAGNE

Rends-toi sur www.LEGO.com/productfeedback

et donne-nous quelques commentaires sur ce produit LEGO® pour avoir une chance de gagner un prix LEGO !

Voir Conditions Générales

GANA

Visita www.LEGO.com/productfeedback

y envíanos tu opinión acerca de este set LEGO®. ¡Participarás en el sorteo de un premio LEGO!

Términos y Condiciones aplicables

获取奖品

登录 *www.LEGO.com/productfeedback*

给出关于此乐高®套装的简短反馈，就有机会获得炫酷乐高奖品

《条款及条件》适用

경품 당첨 기회

www.LEGO.com/productfeedback

페이지로 이동하여 이 레고® 세트에 대한 간략한 피드백을 보내 주시고 멋진 레고 경품을 탈 수 있는 기회도 잡으십시오

약관 적용

ЗАПОЛНИ АНКЕТУ И ПОЛУЧИ ПРИЗ

Перейди по ссылке www.LEGO.com/productfeedback

ответь всего на несколько вопросов об этом наборе LEGO®, и у тебя появится шанс выиграть замечательный приз от компании LEGO.

Применяются Условия и правила участия

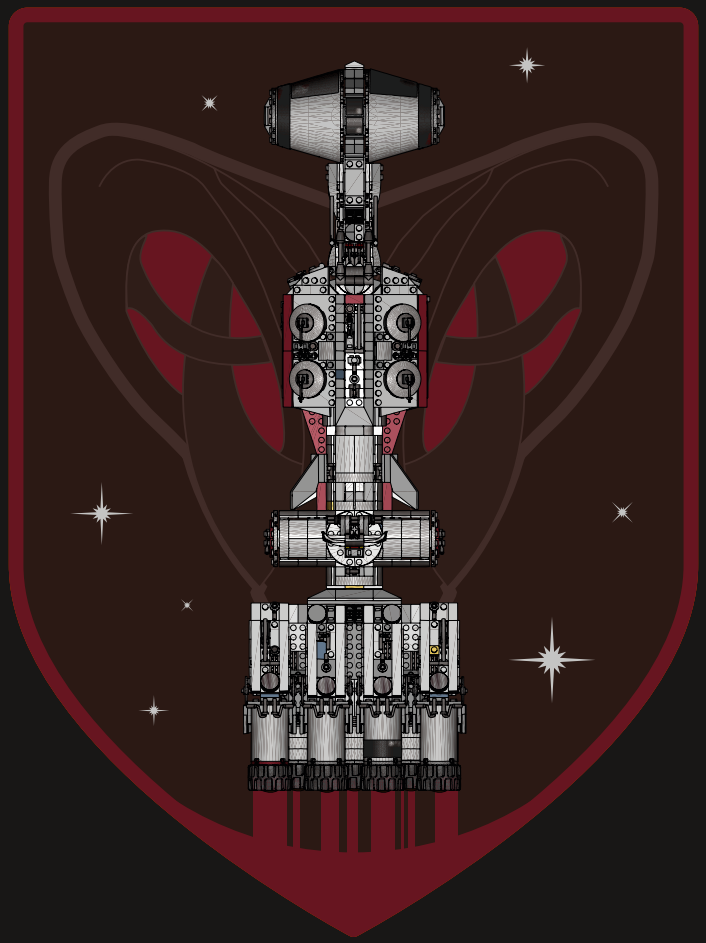

LEGO.com/starwars

LEGO and the LEGO logo are trademarks of the LEGO Group. ©2019 The LEGO Group.
© & ™ Lucasfilm Ltd.
6280116